WACKY DUCKS

OWNERS AND SERVICE MANUAL

INNOVATIVE CONCEPTS IN ENTERTAINMENT INC.

TABLE OF CONTENTS

INTRODUCTION……..PAGE 3

- GAME FEATURES
- GAME PLAY

ASSEMBLY……..PAGE 4 & 5

- BEFORE YOU BEGIN
- TOOLS NEEDED
- INSTALLATION
- SETTING A.C. LINE VOLTAGE ADJUSTMENTS

SET-UP / TESTING……...PAGE 6 - 9

- SAFETY PRECAUTIONS
- PROGRAMMING YOUR GAME
- OPTION MODES
- TESTING

SET-UP / TESTING (NEW JERSEY)……...PAGE 10 - 13

- SAFETY PRECAUTIONS
- PROGRAMMING YOUR GAME
- OPTION MODES
- TESTING

QUICK TROUBLESHOOTING……PAGE 14

- PROBLEMS & SOLUTIONS

REPAIR……..PAGE 15 - 21

- OPERATIONAL BACKGROUND
- MECHANICAL REPAIR
- ELECTRICAL / ELECTRONIC REPAIR
- MAINTENANCE

PARTS LISTINGS……..PAGE 22

SCHEMATICS & WIRING DIAGRAMS.....……...PAGE 23 - 35

INTRODUCTION

GAME FEATURES

Thank you for your purchase of the new WACKY DUCKS™ redemption game from I.C.E.

Through an exclusive agreement with JUPITER GAMES, I.C.E. is able to bring you an innovative product with all of the features and reliability you've come to expect in our games.

The game is constructed of a quality 7 ply MDO plywood cabinet. The cabinet is then sealed, painted and decaled using laminated graphics that resist most common cleaning agents. All metal parts are powder coated for maximum beauty and durability.

The game uses creative lighting techniques to draw game players to it and to enhance game enjoyment. Long lasting rope light is used for the marquee that is mounted behind a multi-color graphics panel to create an attractive rainbow pattern. Flashing ducks and super bright sign grade florescent lighting round out the lighting package.

A unique cartoon like Punching Glove on a scissors mechanism gives the game a fun way for Kids to play the game. The mechanism has been extensively tested for durability and reliability. The solenoid coil that drives the mechanism is fan cooled and thermally protected. The coil is also operated on low voltage D.C. power.

The game electronics are at the same time high tech, yet all drive components are chosen for their long history of reliability. Surface mount components and programmable logic arrays keep the board size to a minimum and the reliability to the maximum.

A high quality digital audio amplifier is used to recreate some of the funniest sounds you'll ever hear in a game. A variety of funny duck sounds will keep you laughing for hours on end.

The ducks move along a belt that is powered by a heavy-duty 12-volt gear motor. This motor has been chosen for its long lasting and cool running capabilities. It has a full-length drive shaft for greater reliability.

All electronics are fully operator adjustable and are adjusted via convenient programming buttons located just inside the coin door. The game allows the operator to choose a timed game or a random hit game depending on the operators' location. (Please see the Game Play section below and the programming section for further information).

GAME PLAY

The game can be set up to be played in two different ways. Both ways are described below.

TIMED GAME

The player inserts their money into the game to begin. Behind the row of ducks are Frog displays that have a "time" indicator on them. Once the player tries to hit his first duck, the count down timer will begin. (The timer will also begin if the player does nothing for ten seconds or more). Once the timer begins, the player needs to hit as many ducks as possible before time runs out.
The player will be awarded tickets based on how many ducks have been knocked down. The player may also receive "mercy" tickets if they were unable to hit any ducks.

ONE HIT GAME

In this version of the game, the player inserts his money to start the game. Then the Frog display will show a random number of "Tickets" that can be won. This number will constantly continue to change during game play. The player can hit the punch button multiple times, however the game ends once the player hits a duck. The player then wins the tickets that were displayed at the time of the hit.

NOTE: This game is generally set up as a "One Hit" game. The operator can however set the game up for a different predetermined number of hits.

ASSEMBLY

BEFORE YOU BEGIN

WARNING: WHEN INSTALLING THIS GAME, A 3 PRONG GROUNDED A.C. RECEPTACLE MUST BE USED. FAILURE TO DO SO COULD RESULT IN INJURY TO YOURSELF OR OTHERS. FAILURE TO USE A GROUNDED RECEPTACLE COULD ALSO CAUSE IMPROPER GAME OPERATION, OR DAMAGE TO THE ELECTRONICS

DO NOT DEFEAT OR REMOVE THE GROUNDING PRONG ON THE POWER CORD FOR THE SAME REASON AS GIVEN ABOVE. USING AN IMPROPERLY GROUNDED GAME COULD VOID YOUR WARRANTY.

HAVE A QUALIFIED ELECTRICIAN CHECK YOU'RE A.C. RECEPTACLE TO BE SURE THE GROUND IS FUNCTIONING PROPERLY.

TOOLS NEEDED

To assemble your game you will need a 7/16" socket or box wrench.

Note: For normal game servicing you will need two different size Allen wrenches which are provided.

INSTALLATION

1. Remove the cardboard box from the pallet.

2. Cut banding that holds the game to the pallet.

NOTE: BE SURE TO STAND TO THE SIDE WHEN CUTTING THE BANDS, AS THEY ARE UNDER PRESSURE, AND COULD SPRING OUT CAUSING INJURY.

3. Remove all of the shrink-wrap and packaging from the game and marquee.

4. Find the location that the game will be placed in and move into rough position.

5. Remove the "Wacky Ducks™ sign on the front of the game by rotating the two locks, and lifting up on them.

6. Remove the 7/16" bolts and fender washers from the rear of the game. There are five of these.

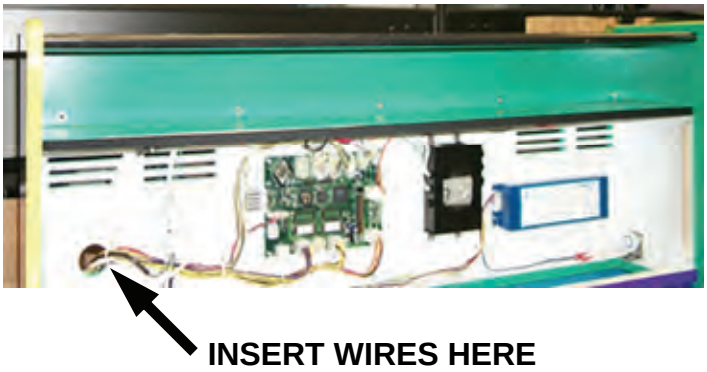

7. Get someone to help and move the Duck / rainbow marquee into position. Insert the rope light and speaker wires through the hole in the back of the game. Tighten the bolts to the marquee.

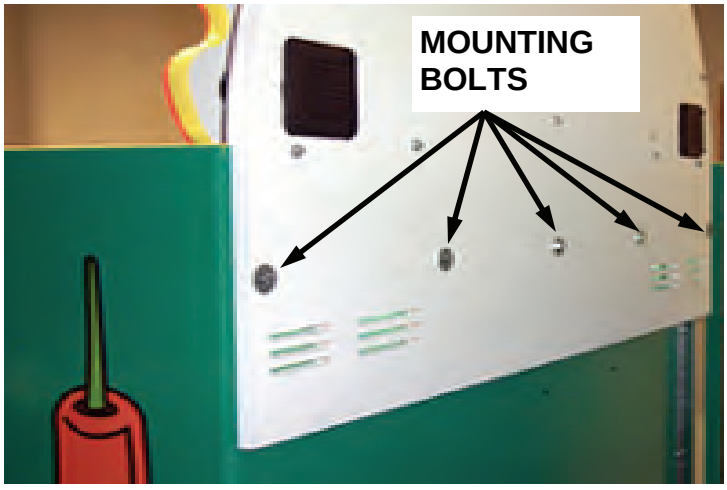

8. Inside the game, connect the rope light and speaker wires.

ASSEMBLY

SETTING A.C. LINE VOLTAGES

The game comes with 4 available line voltage settings as described below. These settings should be used to provide A.C. power in the correct range to the game without over or under powering it.

POWER RANGE	VOLTAGE SETTING
90-110 V.A.C.	115
110-130 V.A.C.	125
200-220 V.A.C.	230
220-250 V.A.C.	250

The game uses a POWER MODULE to handle all of the A.C. power distribution chores of the game. It incorporates an On-Off switch, primary A.C. game fusing, and power switching capabilities. This allows the game to be used with a wide variety of A.C. voltages by re-strapping the main transformer.

A.C. LINE VOLTAGE ADJUSTMENT

To adjust the game for a different A.C. voltage:

- Unplug the game from the outlet.
- Disconnect the power cord from the power module.
- Using a small flat blade screwdriver, pry the fuse holder from the power module.
- Notice a small window on the fuse holder with an arrow that points to the voltage the game is presently set at.
- Using a small flat blade screwdriver, lift the retaining tab that holds the voltage selector in the fuse holder.
- Rotate the voltage selector until the voltage you want is displayed in the voltage select window.
- Push the voltage selector back into the fuse holder until it snaps into place. NOTE: Do not force the selector into the fuse holder. If it does not go in easily, it is not being installed correctly.
- Snap the fuse holder assembly back into the power module.
- Plug the power cord back into the receptacle in the power module, and into the wall outlet.

NOTE: WHEN CHANGING VOLTAGES FROM THE 115-125 TO 230-250 RANGE, LOWER THE MAIN FUSE AMPERAGE VALUE BY ½.

WHEN CHANGING FROM THE 230-250 TO 115-125 VOLT RANGE, DOUBLE THE MAIN FUSE AMPERAGE VALUE.

Plug the game in, turn the power on and play a couple of game. Pay attention to the sound volume of the game.

ADJUSTING VOLUME

There are two volume control potentiometers on the Main P.C. Board. The top one controls the theme music and the bottom one controls the sound effects such as Duck sounds, etc. Adjust these during game play.

FINAL ASSEMBLY

After the volume is adjusted, proceed to the set up / testing section to prepare the game for your location. When all testing is done, re-install the "Wacky Ducks™ Sign, remove the keys, and roll the game into its final location. Lower the adjustable leg levelers to keep the game from moving.

YOUR GAME IS NOW READY TO PLAY. IF YOU HAVE ANY FURTHER QUESTIONS OR COMMENTS REGARDING THE GAME, PLEASE CALL OUR SERVICE DEPARTMENT AT 1-716-859-0360

SET-UP / TESTING

SAFETY PRECAUTIONS

WARNING: WHEN INSTALLING THIS GAME, A 3 PRONG GROUNDED A.C. RECEPTACLE MUST BE USED. FAILURE TO DO SO COULD RESULT IN INJURY TO YOURSELF OR OTHERS. FAILURE TO USE A GROUNDED RECEPTACLE COULD ALSO CAUSE IMPROPER GAME OPERATION, OR DAMAGE TO THE ELECTRONICS

DO NOT DEFEAT OR REMOVE THE GROUNDING PRONG ON THE POWER CORD FOR THE SAME REASON AS GIVEN ABOVE. USING AN IMPROPERLY GROUNDED GAME COULD VOID YOUR WARRANTY.

HAVE A QUALIFIED ELECTRICIAN CHECK YOU'RE A.C. RECEPTACLE TO BE SURE THE GROUND IS FUNCTIONING PROPERLY.

REPLACE ALL INCANDESCENT BULBS WITH PROPER ICE SUPPLIED BULBS ONLY.

PROGRAMMING YOUR GAME

This section will give you a detailed explanation of the functions and operating characteristics of each of the programming buttons.

PLEASE READ THIS SECTION CAREFULLY TO AVOID PROBLEMS WITH YOUR GAME.

PLEASE NOTE: THE PROGRAMMING AND TICKET RESET BUTTONS ARE LOCATED INSIDE THE LEFT HAND COIN DOOR. ADDITIONALLY, THERE IS A SINGLE TICKET RESET BUTTON INSIDE THE RIGHT HAND COIN DOOR.

DISPLAY INFORMATION

THE RIGHT HAND FROG DISPLAY WILL SHOW YOU THE **OPTION** YOU ARE IN. THE LEFT HAND DISPLAY WILL SHOW THE **VALUE OR SETTING** FOR THAT OPTION.

PROGRAMMING BUTTON

Press this button to enter or exit the PROGRAMMING mode. You will notice when you are in the Programming mode, as the displays in the Frogs will change.

SELECT BUTTON

This button is used to change from one option to the next. When this button is pushed, the option number is shown in the display window of the RIGHT HAND Frog.

ADVANCE

This button is used to change the value within the option. When this button is pushed, the value will be shown in the LEFT HAND Frog.

TICKET RESET BUTTON

When the game runs out of tickets, it keeps track of how many are owed. When more tickets are inserted, the game will attempt to dispense all of the tickets that are still owed. If the operator does not wish to dispense these tickets when reloading, press the "Ticket Reset" button BEFORE replacing the tickets. The tickets Reset buttons are located inside the coin doors.

OPTION MODES

MODE 0
(COINS PER CREDIT)

This option determines how many coins are necessary to start a game. The range for this game is 1-10. The default value for this mode is "1"

SET-UP / TESTING

MODE 1
(GAME LENGTH)

This mode determines how long the game lasts in SECONDS. The range for this value is 5-60. The default value for this game is "10"

MODE 2
(COIN OR CREDIT COUNTER)

This mode determines if the coin counter will count coins or credits. (Example: If it takes 3 coins to start a game, then 3 coins would equal 1 credit). Setting a "0" equals coins. Setting a "1" equals credits. The default value for this option is "0".

MODE 3
(TIME BETWEEN HITS)

This mode determines how long the game will make the player wait between hits of the punching glove. The number shown X 100 milliseconds equals the actual time. (Example: 10 X 100 milliseconds equal 1 second). The range for this option is 10-50 (1 to 5 seconds). The default value for this option is "10"

MODE 4
(DUCKS PER XX TICKET DISPENSE)

This option determines how many ducks must be knocked down each time XX tickets can be dispensed. (See OPTION 5 for value of XX) The range for this option is 1-9. The default value for this option is "1".

FOR EXAMPLE, if the value set in OPTION 4 is "2" and the value set in OPTION 5 is "3", the game would dispense 3 tickets for every 2 ducks knocked down.

MODE 5
(VALUE OF XX)

This option determines the number of tickets to dispense each time a dispense order is given by OPTION MODE 4. The range for this option is 1-9. The default value for this option is "1".

MODE 6
(JUST FOR PLAYING TICKETS)

This mode determines the amount of "Mercy" tickets paid to the customer ion the event that they do not win any tickets during normal game play. The range for this option is 0-99. The default value for this option is "3"

NOTE: THIS OPTION FUNCTIONS IN THE TIMED GAME MODE ONLY.

MODE 7
(ATTRACT TIME)

This mode determines the period of time between attract modes. The numbers in this option represent minutes. The range for this option is 0-90. Setting a "0" equals turning the attract mode OFF. The default value for this option is "3

MODE 8
(ATTRACT MODE TYPE)

This option determines which type of attract mode is set.

0= Mode Disabled
1= Audio only
2= Motion only
3= both motion and audio

The default value for this option is "3"

SET-UP / TESTING

MODE 9
(FACTORY RESET)

This mode has the capability to reset all options to the factory default values. The range for this option is 0-1. Setting a "1" will reset all values. The default value for this option is "0" (no reset)

NOTE: THE GAME CAN ALSO BE RESET TO FACTORY DEFAULT VALUES BY TURNING THE GAME OFF, REMOVING THE BATTERY FROM THE MAIN P.C. BOARD. , WAIT A FEW MINUTES THEN TURN THE GAME BACK ON.

THE ABOVE PROCEDURE IS ALSO VALUABLE IF FOR SOME REASON THE GAME ELECTRONICS WERE TO LOCK OR FREEZE UP.

GAME TESTING

After you have completed the set-up of your game, INSTALL TICKETS into the game, and play a few games to make sure everything is working properly. Check the following:

- Check the ticket dispenser to be sure the proper amount of tickets is given.
- Check to be sure the duck belt is tracking properly. If not, check the mechanical repair section for adjustment procedures.
- Be sure all external fasteners like those of the cover glass and puncher housings are installed and tight.

SET-UP / TESTING

ROPE LIGHTING

The rope light in the marquee is operated by a rope light controller located behind the WACKY DUCKS™ sign.

Determine which type of controller is installed in your game. (See photos)

If you have the type shown in the photo below, use the following instructions:

Check to see that the rope light controller is set as follows:

1. The "CHASE" mode switch should be set to position #2.

2. The "SPEED" mode knob should be turned fully clockwise, then rotated back about ¼ inch.

NOTE: THE "SOUND" MODE KNOB IS NOT USED.

If you have the type shown in the photo below, there are no adjustments. The fuse located at the bottom of the printed board is the only user serviceable item.

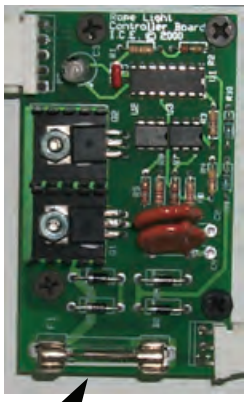

IF YOU HAVE ANY QUESTIONS REGARDING THE PROGRAMMING OPTIONS, PLEASE CONTACT OUR SERVICE DEPARTMENT

PHONE: **1-716-759-0360**
FAX: **1-716-759-0884**
E-MAIL: **service@icegame.com**

SET-UP / TESTING
NEW JERSEY

SAFETY PRECAUTIONS

WARNING: WHEN INSTALLING THIS GAME, A 3 PRONG GROUNDED A.C. RECEPTACLE MUST BE USED. FAILURE TO DO SO COULD RESULT IN INJURY TO YOURSELF OR OTHERS. FAILURE TO USE A GROUNDED RECEPTACLE COULD ALSO CAUSE IMPROPER GAME OPERATION, OR DAMAGE TO THE ELECTRONICS

DO NOT DEFEAT OR REMOVE THE GROUNDING PRONG ON THE POWER CORD FOR THE SAME REASON AS GIVEN ABOVE. USING AN IMPROPERLY GROUNDED GAME COULD VOID YOUR WARRANTY.

HAVE A QUALIFIED ELECTRICIAN CHECK YOU'RE A.C. RECEPTACLE TO BE SURE THE GROUND IS FUNCTIONING PROPERLY.

PROGRAMMING YOUR GAME

This section will give you a detailed explanation of the functions and operating characteristics of each of the programming buttons.

PLEASE READ THIS SECTION CAREFULLY TO AVOID PROBLEMS WITH YOUR GAME.

PLEASE NOTE: THE PROGRAMMING AND TICKET RESET BUTTONS ARE LOCATED INSIDE THE LEFT HAND COIN DOOR. ADDITIONALLY, THERE IS A SINGLE TICKET RESET BUTTON INSIDE THE RIGHT HAND COIN DOOR.

DISPLAY INFORMATION

THE RIGHT HAND FROG DISPLAY WILL SHOW YOU THE **OPTION** YOU ARE IN. THE LEFT HAND DISPLAY WILL SHOW THE **VALUE OR SETTING** FOR THAT OPTION.

PROGRAMMING BUTTON

Press this button to enter or exit the PROGRAMMING mode. You will notice when you are in the Programming mode, as the displays in the Frogs will change.

SELECT BUTTON

This button is used to change from one option to the next. When this button is pushed, the option number is shown in the display window of the RIGHT HAND Frog.

ADVANCE

This button is used to change the value within the option. When this button is pushed, the value will be shown in the LEFT HAND Frog.

TICKET RESET BUTTON

When the game runs out of tickets, it keeps track of how many are owed. When more tickets are inserted, the game will attempt to dispense all of the tickets that are still owed. If the operator does not wish to dispense these tickets when reloading, press the "Ticket Reset" button BEFORE replacing the tickets. The tickets Reset buttons are located inside the coin doors.

OPTION MODES

MODE 0
(COINS PER CREDIT)

This option determines how many coins are necessary to start a game. The range for this game is 1-10. The default value for this mode is "1"

SET-UP / TESTING
NEW JERSEY

MODE 1
(GAME LENGTH)

This mode determines how long the game lasts in SECONDS. The range for this value is 5-60. The default value for this game is "10"

SETTING A "0" FOR THIS MODE WILL PUT THE GAME INTO THE "RANDOM TICKET" MODE.

MODE 2
(COIN OR CREDIT COUNTER)

This mode determines if the coin counter will count coins or credits. (Example: If it takes 3 coins to start a game, then 3 coins would equal 1 credit). Setting a "0" equals coins. Setting a "1" equals credits. The default value for this option is "0".

MODE 3
(TIME BETWEEN HITS)

This mode determines how long the game will make the player wait between hits of the punching glove. The number shown X 100 milliseconds equals the actual time. (Example: 10 X 100 milliseconds equal 1 second). The range for this option is 10-50 (1 to 5 seconds). The default value for this option is "10"

MODE 4
(DUCKS PER XX TICKET DISPENSE)

NOT USED

MODE 5
(VALUE OF XX)

This option determines the number of tickets to dispense each time a dispense order is given by OPTION MODE 4. The range for this option is 1-9. The default value for this option is "1".

MODE 6
(JUST FOR PLAYING TICKETS)

This mode determines the amount of "Mercy" tickets paid to the customer in the event that they do not win any tickets during normal game play. The range for this option is 0-99. The default value for this option is "3". Tickets are paid up front.

NOTE: THIS OPTION FUNCTIONS IN THE TIMED GAME MODE ONLY.

MODE 7
(ATTRACT TIME)

This mode determines the period of time between attract modes. The numbers in this option represent minutes. The range for this option is 0-90. Setting a "0" equals turning the attract mode OFF. The default value for this option is "3

MODE 8
(ATTRACT MODE TYPE)

This option determines which type of attract mode is set.

0= Mode Disabled
1= Audio only
2= Motion only
3= both motion and audio

The default value for this option is "3"

SET-UP / TESTING
NEW JERSEY

MODE 9
(FACTORY RESET)

This mode has the capability to reset all options to the factory default values. The range for this option is 0-1. Setting a "1" will reset all values. The default value for this option is "0" (no reset)

NOTE: THE GAME CAN ALSO BE RESET TO FACTORY DEFAULT VALUES BY TURNING THE GAME OFF, REMOVING THE BATTERY FROM THE MAIN P.C. BOARD. , WAIT A FEW MINUTES THEN TURN THE GAME BACK ON.

THE ABOVE PROCEDURE IS ALSO VALUABLE IF FOR SOME REASON THE GAME ELECTRONICS WERE TO LOCK OR FREEZE UP.

GAME TESTING

After you have completed the set-up of your game, INSTALL TICKETS into the game, and play a few games to make sure everything is working properly. Check the following:

- Check the ticket dispenser to be sure the proper amount of tickets is given.
- Check to be sure the duck belt is tracking properly. If not, check the mechanical repair section for adjustment procedures.

Be sure all external fasteners like those of the cover glass and puncher housings are installed and tight.

SET-UP / TESTING
NEW JERSEY

ROPE LIGHTING

The rope light in the marquee is operated by a rope light controller located behind the WACKY DUCKS™ sign.

Determine which type of controller is installed in your game. (See photos)

If you have the type shown in the photo below, use the following instructions:

Check to see that the rope light controller is set as follows:

1. The "CHASE" mode switch should be set to position #2.

2. The "SPEED" mode knob should be turned fully clockwise, then rotated back about ¼ inch.

NOTE: THE "SOUND" MODE KNOB IS NOT USED.

SOUND CONTROL

SPEED CONTROL

CHASE CONTROL

If you have the type shown in the photo below, there are no adjustments. The fuse located at the bottom of the printed board is the only user serviceable item.

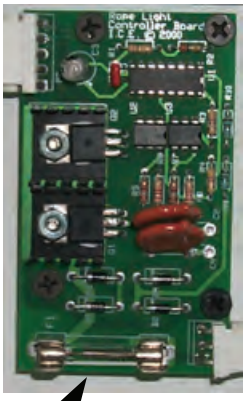

FUSE

IF YOU HAVE ANY QUESTIONS REGARDING THE PROGRAMMING OPTIONS, PLEASE CONTACT OUR SERVICE DEPARTMENT

PHONE: **1-716-759-0360**
FAX: **1-716-759-0884**
E-MAIL: **service@icegame.com**

QUICK TROUBLESHOOTING

GAME WILL NOT START	NO A.C. POWER POWER MODULE SET INCORRECTLY FUSE BAD IN POWER MODULE FUSE BAD ON MAIN P.C. BOARD NO CREDITS BAD COIN MICRO SWITCH BAD TRANSFORMER BAD GAME HARNESSING BAD MAIN P.C. BOARD	CHECK POWER AT A.C. RECEPTACLE CHECK VOLTAGE SETTING CHECK OR REPLACE FUSE CHECK OR REPLACE FUSE INSERT PROPER AMOUNT OF COINS CHECK OR REPLACE MICRO SWITCH CHECK TRANSFORMER VOLTAGES CHECK W / METER & REPAIR IF NEEDED REPAIR OR REPLACE MAIN P.C. BOARD
DUCKS WILL NOT MOVE	BAD DRIVE MOTOR BAD DRIVE TRANSISTOR NO CREDITS IN GAME BAD FUSE ON MAIN P.C. BOARD BELT BINDING	REPLACE DRIVE MOTOR REPAIR OR REPLACE MAIN P.C. BOARD ADD CREDITS TO GAME CHECK OR REPLACE FUSE SEE MANUAL FOR BELT ADJUSTMENT
TICKETS WILL NOT DISPENSE	BAD TICKET DISPENSER BAD GAME HARNESSING NO TICKETS IN GAME GAME PROGRAMMED IMPROPERLY	CHECK FOR JAMS OR REPLACE CHECK W / METER & REPAIR IF NEEDED ADD TICKETS TO GAME RE-PROGRAM TICKET DISPENSE OPTION
DUCK MARQUEE WON'T LIGHT OR FLASHES INCORRECTLY	CHECK CONTROL UNIT FOR POWER BAD FUSE ON ROPE LIGHT P.C. BOARD IS LIGHT CONTROL SET CORRECTLY ROPE LIGHT NOT CONNECTED ROPE LIGHT BAD OR SHORTED	IS SWITCH TURNED ON CHECK OR REPLACE FUSE SEE SET-UP FOR DIRECTIONS HOOK UP ROPE LIGHTING REPLACE ROPE LIGHTING
DISPLAY DUCKS WILL NOT LIGHT OR FLASH OR STAYS LIT	BAD LIGHT BULB BAD HARNESSING BAD TRANSISTOR ON MAIN BOARD	CHECK AND REPLACE BULB CHECK W / METER & REPAIR IF NEEDED REPAIR OR REPLACE MAIN P.C. BOARD
FROG DISPLAYS DON'T WORK OR WORK INCORRECTLY. EYE LIGHTS DON'T FLASH	BAD FROG DISPLAY BAD HARNESSING BAD LIGHT BULB	REPAIR OR REPLACE P.C. BOARD CHECK W / METER & REPAIR IF NEEDED REPLACE BULB
NO SCORE WHEN DUCKS ARE KNOCKED OVER	BAD FROG DISPLAY BAD MICRO SWITCH MICRO SWITCH WIRE BENT WRONG BAD HARNESSING	REPAIR OR REPLACE P.C. BOARD REPLACE MICRO SWITCH REBEND WIRE FOR OPTIMUM CONTACT CHECK W / METER & REPAIR IF NEEDED
NO FLORESCENT LIGHTING	BAD FLORESCENT BULB BAD LIGHT BALLAST BAD WIRING	REPLACE BULB REPLACE BALLAST CHECK W / METER & REPAIR IF NEEDED
NO SOUND OR SOUND LOW	BAD SPEAKER BAD WIRING VOLUME SET TOO LOW	REPLACE SPEAKER CHECK W / METER & REPAIR IF NEEDED ADJUST VOLUME (SEE MANUAL)
PUNCHING GLOVE DOESN'T WORK OR WORKS SLOWLY	BAD DRIVE TRANSISTOR BAD THERMAL SWITCH BAD COOLING FAN BAD PUSH BUTTON SWITCH BAD HARNESSING	REPAIR OR REPLACE MAIN P.C. BOARD TEST OR REPLACE SWITCH REPLACE FAN CHECK OR REPLACE SWITCH CHECK W / METER & REPAIR IF NEEDED

GAME REPAIR

OPERATIONAL BACKGROUND

The WACKY DUCKS™ game has been designed to be as easy as possible to repair.

The duck belt can be easily adjusted while in the game, yet can be removed easily from the game if replacement should ever become necessary.

The punching mechanisms have been designed for easy access by simply removing the access covers.

TROUBLESHOOTING PHILOSOPHY

To find problems with the game, always first check what should be obvious. See that the game is plugged in, and that all of the fuses on the game are good. This includes the fuse that is located INSIDE the power module.

Next, check to see that all of the connectors are firmly seated and that none of the wires have been pulled out of them.

When trying to find out if specific components are bad or not, try swapping them with components from another player station to see if the problem moves with the component, or stays where it was. This will help you to know if you have a problem with a specific component, or maybe a problem with either the wiring or the Main P.C. Board.

Use extreme caution when using probes or voltmeters if the game is powered up. If doing continuity checks, it is important to disconnect the harnessing at both ends, as attached they may yield erroneous results.

If a P.C. Board is suspected as the cause of a problem, check to see that all of the components on the board are firmly attached. Pay special attention to any socketed devices.

If light bulbs are suspected, swap them with one that is known to work to narrow the problem down to either a bulb or P.C. Board.

MECHANICAL REPAIR

PUNCHING GLOVE ASSEMBLY OVERVIEW

The punching glove system is designed for high reliability and safety. The assembly can be designed with simplicity in mind, as the solenoid is driven for maximum pull in strength.

The solenoid is driven by approximately 35 DC volts. This voltage may be higher or lower depending on your A.C. voltage at the wall.

The solenoid is fan cooled to allow for higher voltages that will in turn provide the higher pull in strength.

Since fan cooling is necessary under a high game play mode, the solenoid is protected by a bi-metal thermal switch that is strapped directly to the solenoid bobbin. This switch assures that if the fan fails, the solenoid power will be shut down before the coil could be damaged.

The thermal switch is run "IN LINE" with the solenoid power. This simple arrangement is very reliable and easy to troubleshoot.

TESTING THE COIL

TESTING FOR POWER - Disconnect the coil from the connectors. Using a voltmeter, measure that voltage is present during game play if the punch button is pressed. There should be a voltage of 30+ volts D.C. If you do not see this much voltage, but do see some, your meter is probably too slow to see the voltage, as it is only on for approximately 100 milliseconds. If you don't see any voltage at all, the solenoid driver F.E.T. on the main P.C. Board could be bad. It could also be that the push button is not sending a signal to the main P.C. Board.

If you see voltage to the coil, but the mechanism won't fire, check that the thermal switch is working correctly. When the thermal switch is cool, disconnect the wires from its leads and do a continuity test across the switch terminals. You should see continuity. If you don't, the switch needs to be replaced.

GAME REPAIR

If you see that the thermal switch is good, check to see that the coil and the diode on the coil are good.

Disconnect the coil and unsolder 1 side of the diode. Do a resistance check to see that there is infinite resistance in one direction. If there is no resistance in either direction the diode is bad. If the diode is bad, there is also a chance that the drive transistor and / or fuse could be bad as well.

If the diode tests good, check to see the resistance of the coil. It should measure approximately 3.8 ohms. This resistance will vary some depending on the temperature of the coil. If the resistance is significantly more or less, the coil should be replaced.

COIL REPLACEMENT

1. Remove the 2 bolts that hold the punching mech cover in place.

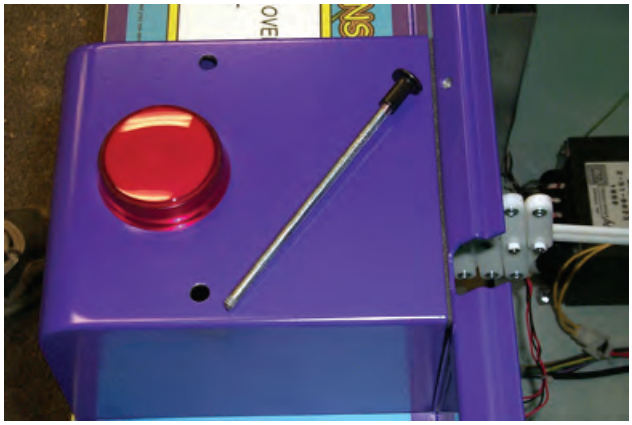

2. Disconnect the micro switch assembly from the push button and remove the cover.

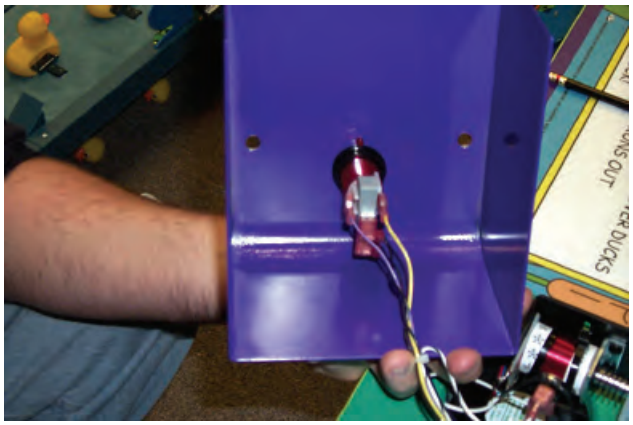

3. Remove the 2 square drive screws that hold the cardboard fan shroud in place.

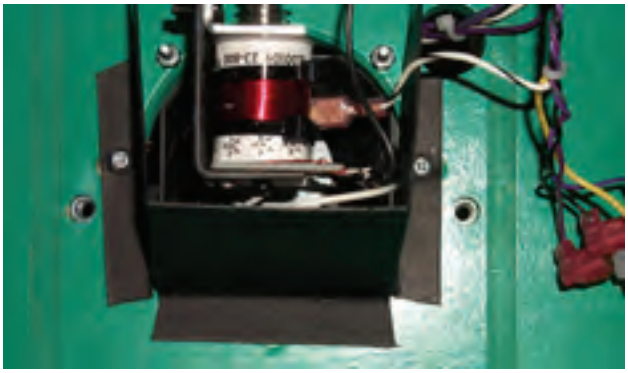

4. Remove the wires that attach to the solenoid.

5. Remove the 4 screws that hold the assembly into the cabinet. NOTE: IF THERE ARE SPACERS TO ADJUST THE SOLENOID ANGLE BETWEEN THE PUNCHER BRACKET AND CABINET, BE SURE TO USE THEM IN THE SAME PLACE WHEN REASSEMBLING THE GAME.

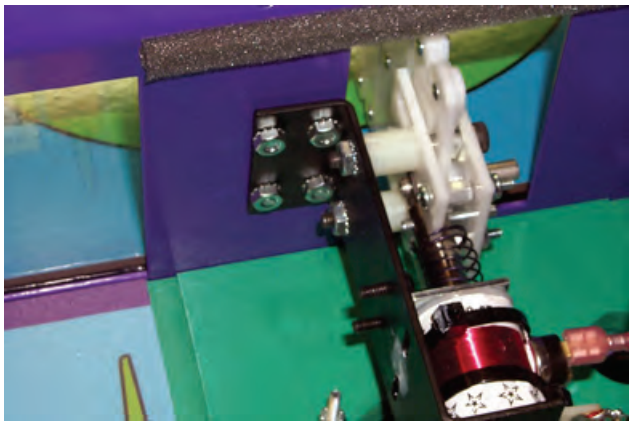

GAME REPAIR

6. Remove the hex nuts that secure the 2 long shoulder bolts to the puncher mounting bracket. Unscrew the two shoulder bolts from the puncher mounting bracket. The puncher assembly should now be able to be removed.

7. Remove the 2 screws that hold the coil retaining bracket to the puncher bracket. The solenoid may now be removed.

8. Assemble in the reverse order.

NOTE: WHEN RE-ASSEMBLING THE PUNCHER ASSEMBLY, BE SURE TO USE LOCK-TITE ON THE SHOULDER BOLT THREADS AND RETAINING NUTS.

DUCK BELT ASSEMBLY ADJUSTMENT AND REPAIR

There are two different adjustments that should be occasionally performed on the belt assembly.

The first is an adjustment to get the proper amount of tension to the duck belt. This is important to prevent the ducks from hanging too low on the bottom of the belt, and to help insure proper tracking.

The second type of adjustment is to set the tracking accurately to the center of the belt board.

NOTE: BOTH OF THE ABOVE ADJUSTMENTS ARE NECESSARY WHEN THE BELT NO LONGER RUNS CENTERED ON THE BELT BOARD OR WHEN REPAIRS TO THE DUCK BELT ASSEMBLY ARE PERFORMED.

MOTOR REPAIR

1. Turn off A.C power

2. Remove cover glass by removing the 4 Allen screws that hold the glass retainer.

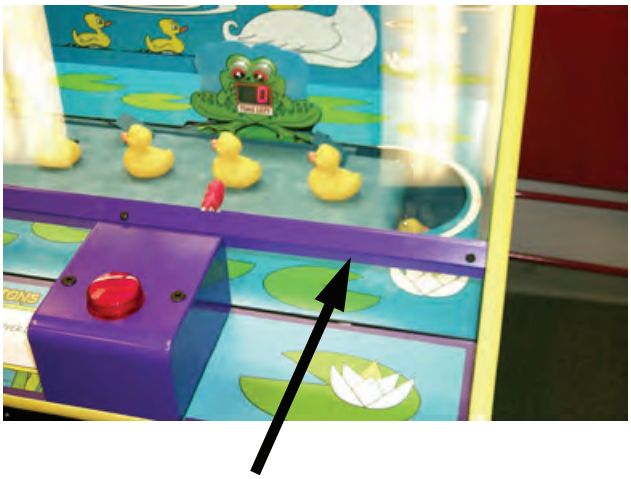

GLASS RETAINER

3. Remove the Masonite "pond" covers that are held in place with Velcro.

4. Remove the wires that are connected to the D.C. motor. NOTE: MARK THE WIRES TO BE SURE THE MOTOR DOES NOT RUN BACKWARDS WHEN THE GAME IS POWERED BACK ON. IF THE BELT RUNS BACKWARDS THE BELT COULD BE SEVERELY DAMAGED.

MOTOR WIRES ON THIS END

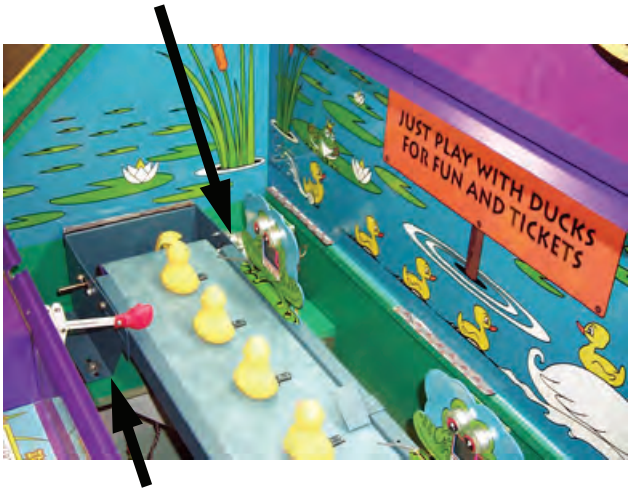

CONVEYOR MOUNTING BOLTS ARE LOCATED IN THIS AREA ON BOTH SIDES

1. Remove the 4 bolts that hold the belt assembly into the game.

2. Remove the belt assembly from the game. BE CAREFUL NOT TO SCRATCH THE GAME WHEN REMOVING THE ASSEMBLY. Place the assembly on a suitable work surface.

GAME REPAIR

7. Loosen the 4 adjusting bolts on BOTH ends of the assembly to loosen up the duck belt.

LOOSEN THESE SCREWS
(BOTH SIDES)

8. On the DRIVE MOTOR SIDE of the assembly, pull the belt to the side and loosen the 2 Allen set screws that hold the drive roller to the motor shaft.

9. Loosen the Allen set screws that holds the small roller bearing to the motor shaft.

10. Remove the 4 screws and nuts that hold the motor to the assembly.

11. RE-ASSEMBLE IN THE REVERSE ORDER.

12. NOTE: TIGHTEN THE SCREWS THAT HOLD THE MOTOR TO THE ASSEMBLY JUST TIGHT ENOUGH TO JUST SQUEEZE THE GASKET MATERIAL. OVER TIGHTENING COULD CAUSE SHAFT MIS-ALIGNMENT AND / OR EXCESSIVE MOTOR NOISE.

13. FOLLOW THE DUCK BELT ADJUSTMENT PROCEDURES AT THE END OF THIS SECTION.

BELT REPLACEMENT

1. Turn off A.C power

2. Remove cover glass by removing the 4 Allen screws that hold the glass retainer.

3. Remove the Masonite "pond" covers that are held in place with Velcro.

4. Remove the wires that are connected to the D.C. motor. NOTE: MARK THE WIRES TO BE SURE THE MOTOR DOES NOT RUN BACKWARDS WHEN THE GAME IS POWERED BACK ON. IF THE BELT RUNS BACKWARDS THE BELT COULD BE SEVERELY DAMAGED.

5. Remove the 4 bolts that hold the belt assembly into the game.

6. Remove the belt assembly from the game. BE CAREFUL NOT TO SCRATCH THE GAME WHEN REMOVING THE ASSEMBLY. Place the assembly on a suitable work surface.

7. Loosen the 4 adjusting bolts on BOTH ends of the assembly to loosen up the duck belt.

8. On the DRIVE MOTOR SIDE of the assembly, pull the belt to the side and loosen the 2 Allen set screws that hold the drive roller to the motor shaft.

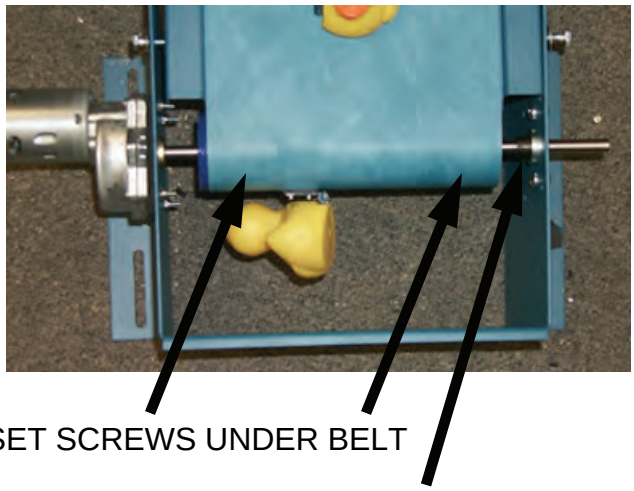

SET SCREWS UNDER BELT

BEARING SET SCREW

9. Loosen the Allen set screw that holds the small roller bearing to the motor shaft.

10. Remove the 4 screws and nuts that hold the motor to the assembly.

GAME REPAIR

MOTOR MOUNTING SCREWS

11. On the IDLER ROLLER side of the assembly, pull the belt to the side and loosen the 2 Allen set screws that hold the drive roller to the motor shaft.

12. Loosen the Allen setscrews that hold the idler roller shaft and slide the shaft out.

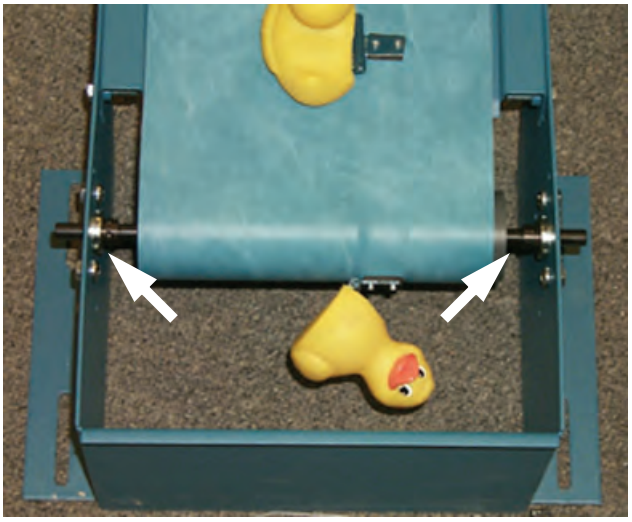

LOOSEN THESE SCREWS

13. Remove the 4 adjusting bolts on both ends of the assembly, separate the end brackets and remove the belt.

14. RE-ASSEMBLE IN THE REVERSE ORDER.

15. NOTE: TIGHTEN THE SCREWS THAT HOLD THE MOTOR TO THE ASSEMBLY JUST TIGHT ENOUGH TO JUST SQUEEZE THE GASKET MATERIAL. OVER TIGHTENING COULD CAUSE SHAFT MIS-ALIGNMENT AND / OR EXCESSIVE MOTOR NOISE.

6. FOLLOW THE DUCK BELT ADJUSTMENT PROCEDURES AT THE END OF THIS SECTION.

DUCK BELT ADJUSTMENT

1. **PRELIMINARY ADJUSTMENT** - Loosen the 4 bolts that hold the duck belt assembly to the cabinet. They should be loose enough that the entire unit can be slid back and forth easily.

2. Loosen the eight bolts that are used to tighten the belt. There are 4 bolts on each end.

3. Loosen the bolts that secure the roller bearings to the assembly, and re-tighten them at the mid-point of their adjustment slots.

4. Tighten the bolts on the idler roller end of the assembly about ½" from the innermost position.

5. Pull on the motor end of the assembly to remove slack from the belt.

6. NOTE: WHEN THE BELT SLACK IS ADJUSTED PROPERLY THERE WILL BE NO MORE THAN 2 INCHES OF DROOP ON THE BOTTOM SIDE OF THE BELT.

7. If there is more than 2 inches, retighten the belt.

8. **FINAL ADJUSTMENT** - Start a game and notice how the belt track.

9. If the belt tracks to one particular side, loosen the bolts that adjust the roller bearings and move the roller in or out for proper tracking. This can be done during a game when the belt is moving, if done carefully.

10. It may be necessary to adjust both ends once or twice to get the optimum tracking.

GAME REPAIR

11. NOTICE: DO NOT LET THE BELT DRAG ACROSS THE DUCK-UP RAMPS. THIS COULD CAUSE DAMAGE OR FRAYING OF THE BELT MATERIAL OR COULD DAMAGE THE SEWN BELT SEAM.

BULB REPLACEMENT

ROPE LIGHT

1. Remove the WACKY DUCKS™ sign from the front of the game.

2. Disconnect the rope light connector and the 2-wire speaker harness.

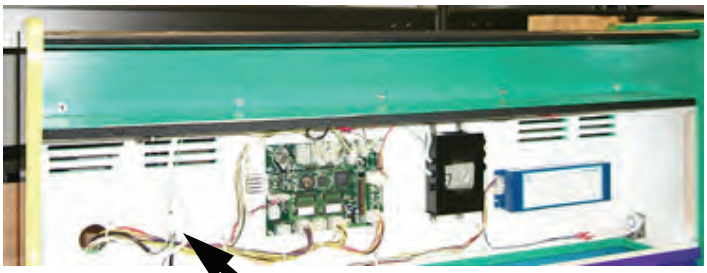

DISCONNECT WIRES HERE

3. Remove the WACKY DUCKS™ marquee from the game by removing the 5 bolts and washers that hold it to the cabinet.

4. Remove the speaker (duck feet) from the marquee.

REMOVE BOLTS FROM DUCK FEET & DUCK PROFILE

5. Remove the duck graphic from the marquee.

6. The rainbow plastic will now come off of the marquee. Replacement of the rope light is now possible.

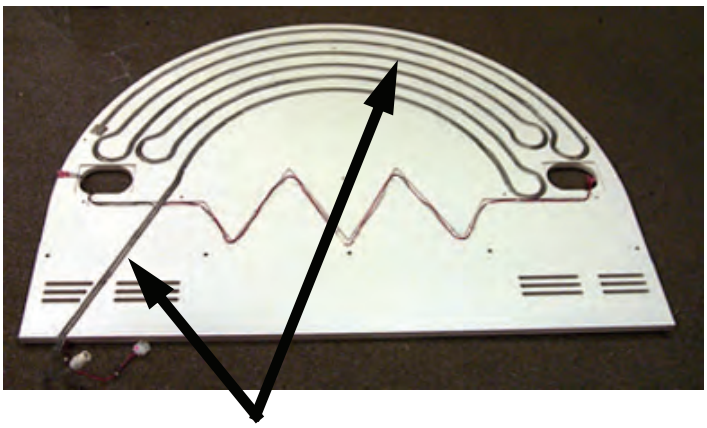

ROPE LIGHT

7. Re-assemble in reverse order.

FLASHING DUCKS

1. Remove the WACKY DUCKS™ sign from the front of the game.

2. Unscrew the single wood screw that holds the light socket in from THE BOTTOM of the duck.

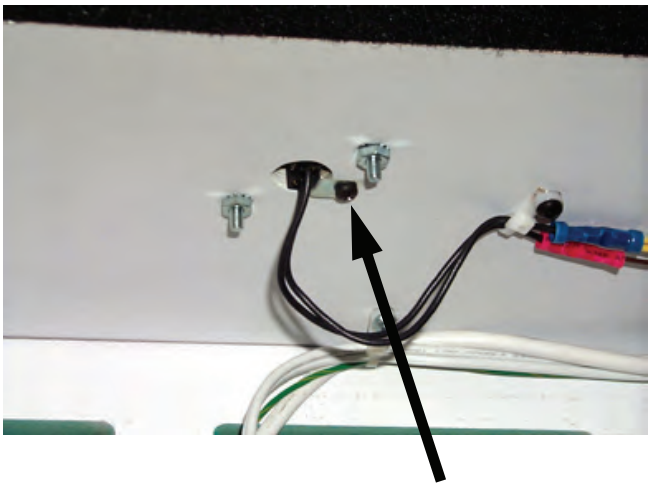

REMOVE THIS SCREW

3. DO NOT REMOVE THE DUCK BY PULLING ON IT. IT IS GLUED IN PLACE AND IS NOT MEANT TO BE REMOVED. IF IT IS REMOVED BY MISTAKE, IT MUST BE RE-FASTENED USING SILICONE ADHESIVE ONLY.

4. Re-assemble in reverse order.

GAME REPAIR

FROG EYES

1. Untwist bulb socket from rear of frog P.C. Board.

BULB SOCKETS

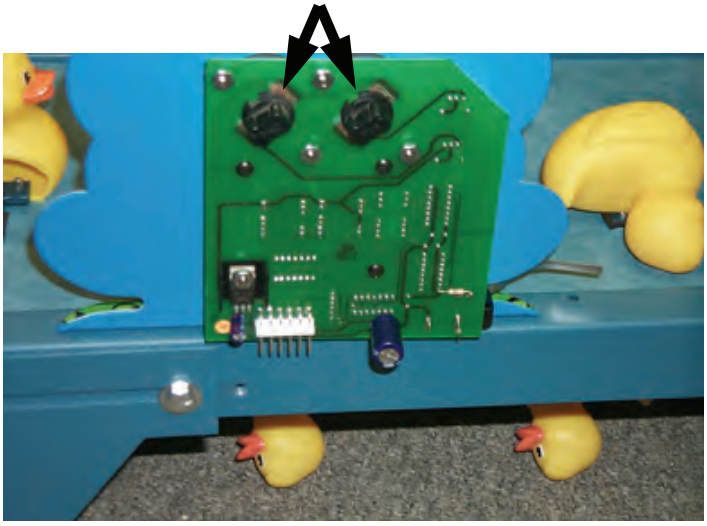

2. Replace bulb.

3. Re-insert socket into board and check for proper operation.

ELECTRICAL / ELECTRONIC REPAIR

MAIN P.C. BOARD

1. Turn off all A.C. power and remove the power cord from the A.C. receptacle.

2. Remove the WACKY DUCKS™ sign from the front of the game.

3. Remove all of the P.C. Board connectors, noting where each one connects onto the board.

4. Remove the 4 hex fasteners that connect the board to the cabinet.

5. Re-assemble in reverse order.

FROG DISPLAY BOARD

1. Remove the cover glass retainer by removing the 4 Allen head screws, and remove the cover glass.

2. Unplug the frog display board.

3. Remove the 3 screws that hold the P.C. Board to the frog display.

4. Re-assemble in the reverse order.

MAINTENANCE

Maintenance is easy, as the game requires very little service under normal use. For your customers to get the greatest enjoyment from the game, please perform the following periodically:

- Clean the cabinet with soapy water or a commercial cleaner such as Fantastik™ or Formula 409™. Do not use any chemicals such as alcohol, benzene, or paint thinners that could damage the finish. Finish cleaning the cabinet by applying a good quality spray furniture polish.

- Clean the glass with a good quality glass cleaner.

- Adjust the Duck Belt to assure proper tracking and operation.

- Clean the coin mechs with a soapy water solution to remove dirt and grime.

- Clean the push buttons if they become sticky in use.

- Clean dirt and grime from the punching mechanisms if they become sluggish.

NOTE: DO NOT USE ANY LUBRICANT ON THE PUNCHING MECHANISMS, AS THIS WILL ONLY ATTRACT DIRT, WHICH WILL BIND, AND SLOW THE UNITS. If the punching mechanisms still respond sluggishly after cleaning, check you're A.C. line voltage to be sure it matches the way your game is set.

IF YOU HAVE ANY QUESTIONS REGARDING THE PROGRAMMING OPTIONS, PLEASE CONTACT OUR SERVICE DEPARTMENT

PHONE: **1-716-759-0360**
FAX: **1-716-759-0884**
E-MAIL: **service@icegame.com**

PARTS LISTING

MECHANICAL PARTS

FP1019	LEVELER FOOT
HD1052	SWIVEL CASTER
WA5001	TRIPLE COIN DOOR
WK1001	CONTROL BOX
WK1014	RAMP (DUCK LIFT)
WK1020	PUNCH ASSEMBLY BRACKET
WK1022	SPRING PLUNGER LINK
WK1023	SCISSOR PIN
WK1025	COIL RETAINER BRACKET
WK1026	HINGE WASHER, SQUARE
WK1050	BEARING, CONVEYOR ROLLER
WK1051	HINGE, DUCK TARGET
WK1052	PLUNGER SPRING
WK3005X	CONVEYOR ROLLER W / GRIT
WK3010	PLUNGER LINK BLOCK 1 ½ SQ.
WK3011	PLUNGER LINK #1
WK3012	PLUNGER LINK #2
WK3013	PLUNGER LINK #3
WK3014	PLUNGER LINK #4
WK3015	PLUNGER LINK, END
WK3016	PUNCHING GLOVE
WK3020	DUCK, SMALL BABY
WK3021	DUCK, LARGE MAMA
WK4001X	CONVEYOR BELT ASSEMBLY
WK9001	SERVICE MANUAL

ELECTRICAL / ELECTRONIC PARTS

211	LOW TICKET SWITCH
2005	LIGHT BULB, #906
2026	THERMAL SWITCH
2133CW	ROPE LIGHT, CHASING 110 VOLT
2364X	FAN ASSEMBLY
HH5005	TICKET DISPENSER
PC20224	12-VOLT COUNTER
PC20238	BULB SOCKET, TWIST
PC20239	LIGHT BULB, #161
WK2001X	POWER SUPPLY
WK2002X	TRANSFORMER
WK2007X	POWER MODULE
WK2008	DRIVE MOTOR
WK2009	COIL, INCLUDES SLEEVE
WK2032X	DISPLAY P.C. BOARD ASSEMBLY
WK2034X	MAIN P.C. BOARD ASSEMBLY
WK2133CTLX	ROPE LIGHT CONTROLLER
WK8284X	BALLAST ASSEMBLY

GRAPHICS & DECALS

7031	FOR INDOOR USE ONLY DECAL
7033	WARNING, POWER DIS DECAL
7047	WARNING, VHO BULB ONLY
WK7000	OUTSIDE LEFT CABINET DECAL
WK7001	OUTSIDE RIGHT CABINET DECAL
WK7002	CABINET INSIDE LEFT DECAL
WK7003	CABINET INSIDE RIGHT DECAL
WK7004	FROG DECAL
WK7005	POND DECAL
WK7007	REAR BACKDROP DECAL
WK7008	DUCK DISPLAY DECAL
WK7009	EYEBALL DECAL
WK7010	LOWER CABINET FRONT DECAL
WK7012	LEFT CONTROL PANEL
WK7013	INSTRUCTION DECAL (TIME)
WK7014	RIGHT CONTROL PANEL
WK7021	PROGRAMMING DECAL
WK7023	INSTRUCTION DECAL (TICKET)
WK7024	FROG "TICKET" DECAL
WK7025	CLOUD
WK7026	RAINBOW MARQUEE BACKGROUND
WK7028	FRONT HEADER SIGN
WK7029	DUCK MARQUEE DECAL

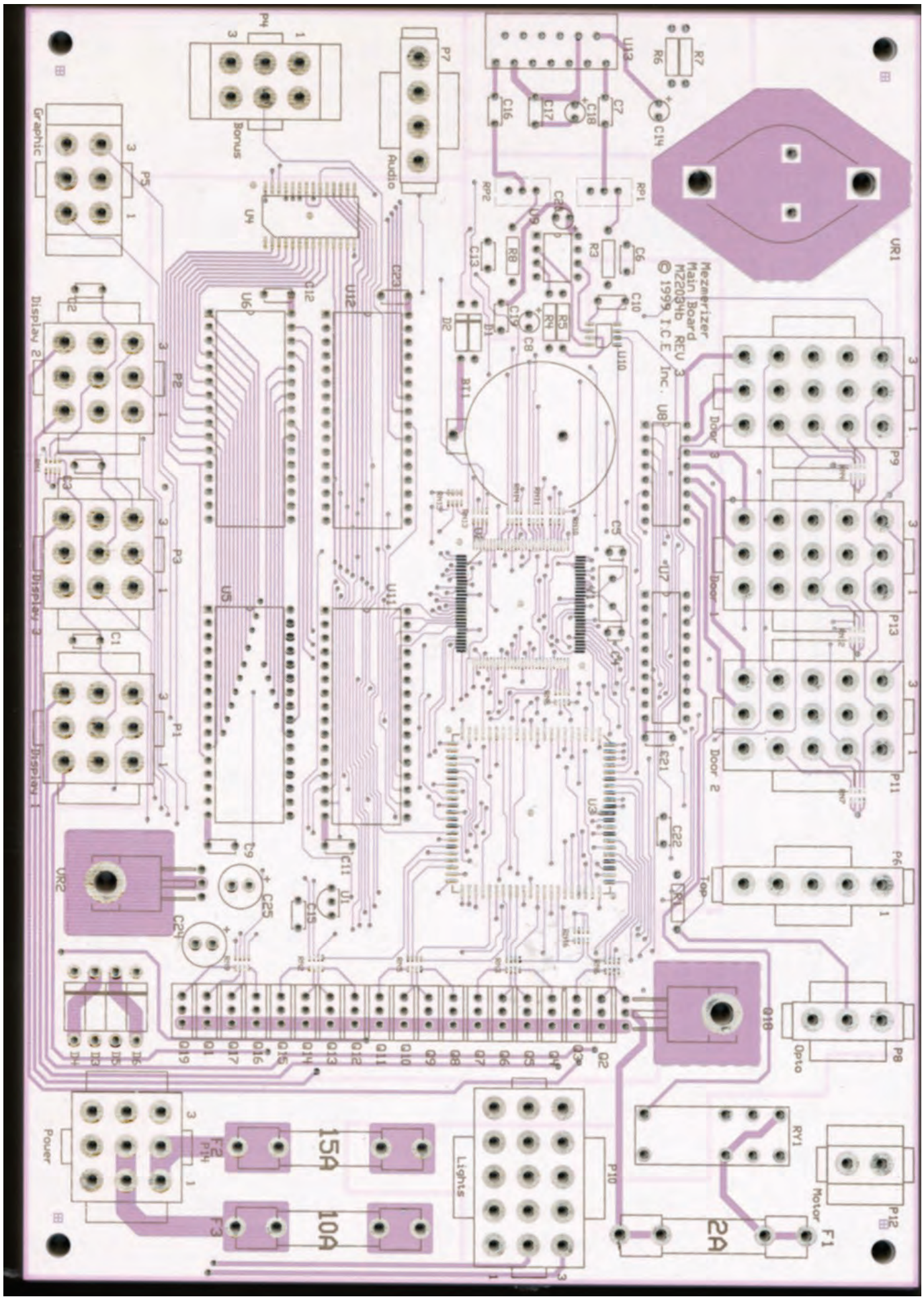
Mezmerizer
Main Board
MZ2064b REV 3
© 1999 I.C.E. Inc.
Graphic
Bonus
Audio
Display 2
Display 3
Display 1
Door 3
Door 1
Door 2
Top
Opto
Motor
Lights
Power
15A
10A
2A
F1
F2
F3

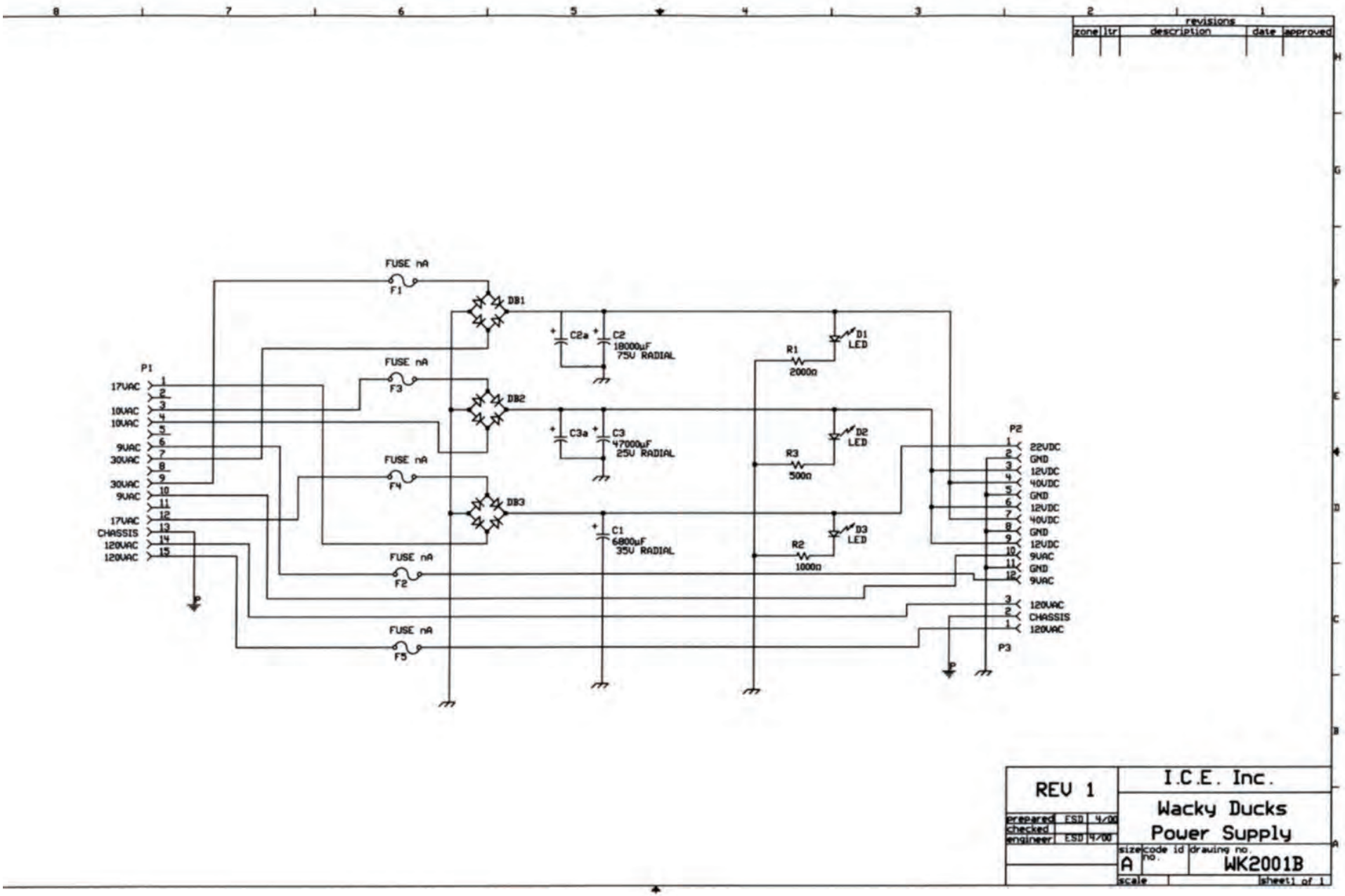
revisions
zone | ltr | description | date | approved
FUSE nA
F1
DB1
C2a
C2
18000µF
75V RADIAL
D1
LED
R1
2000Ω
P1
17VAC
10VAC
10VAC
9VAC
30VAC
30VAC
9VAC
17VAC
CHASSIS
120VAC
120VAC
FUSE nA
F3
DB2
C3a
C3
47000µF
25V RADIAL
D2
LED
R3
500Ω
FUSE nA
F4
DB3
C1
6800µF
35V RADIAL
D3
LED
R2
1000Ω
FUSE nA
F2
FUSE nA
F5
P2
22VDC
GND
12VDC
40VDC
GND
12VDC
40VDC
GND
12VDC
9VAC
GND
9VAC
P3
120VAC
CHASSIS
120VAC
REV 1
prepared ESD 4/00
checked
engineer ESD 4/00
I.C.E. Inc.
Wacky Ducks
Power Supply
size code id drawing no.
A no. WK2001B
scale
sheet1 of 1

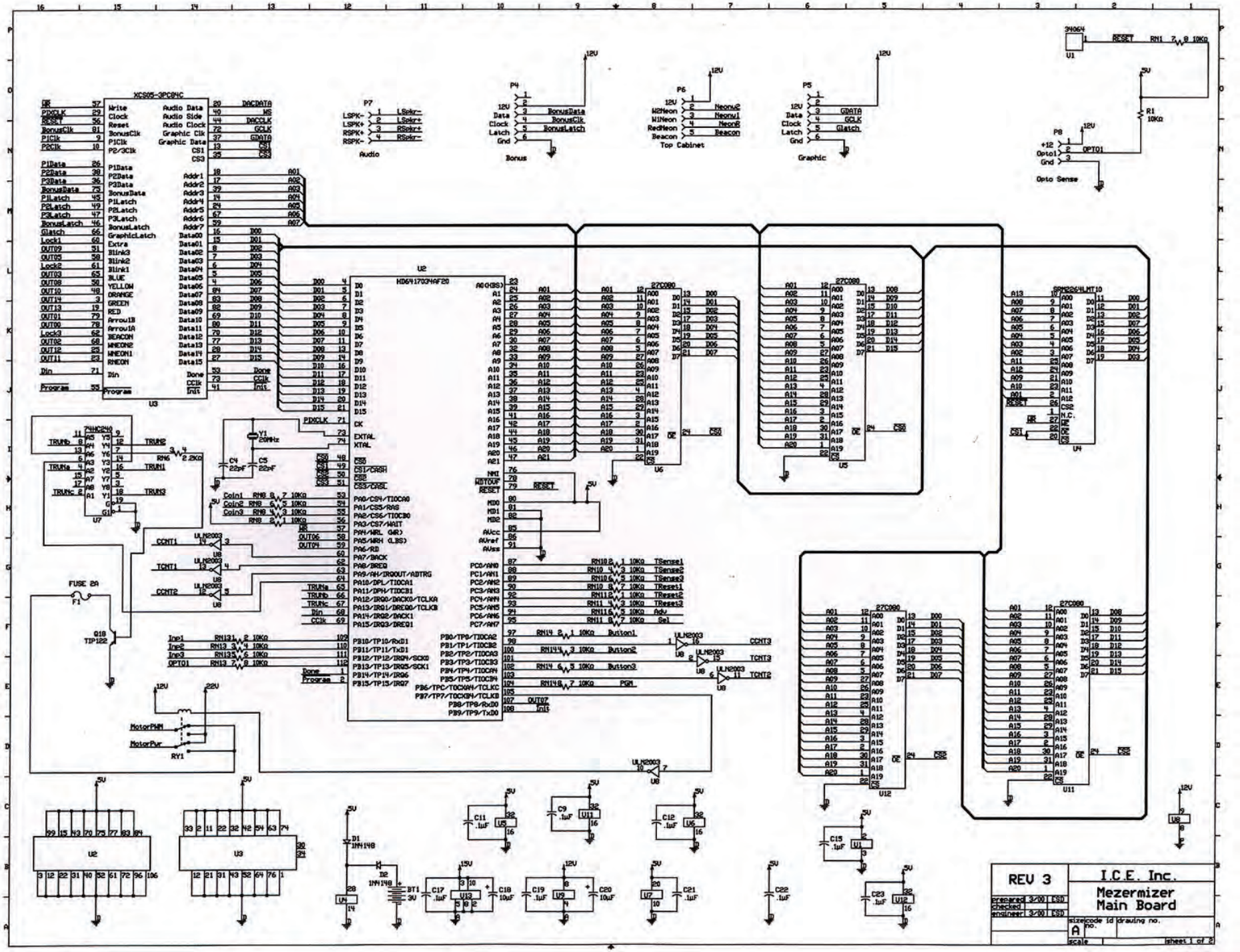
REV 3
I.C.E. Inc.
Mezermizer
Main Board
prepared 3/00 ESD
checked
engineer 3/00 ESD
size code id drawing no.
A
scale
sheet 1 of 2

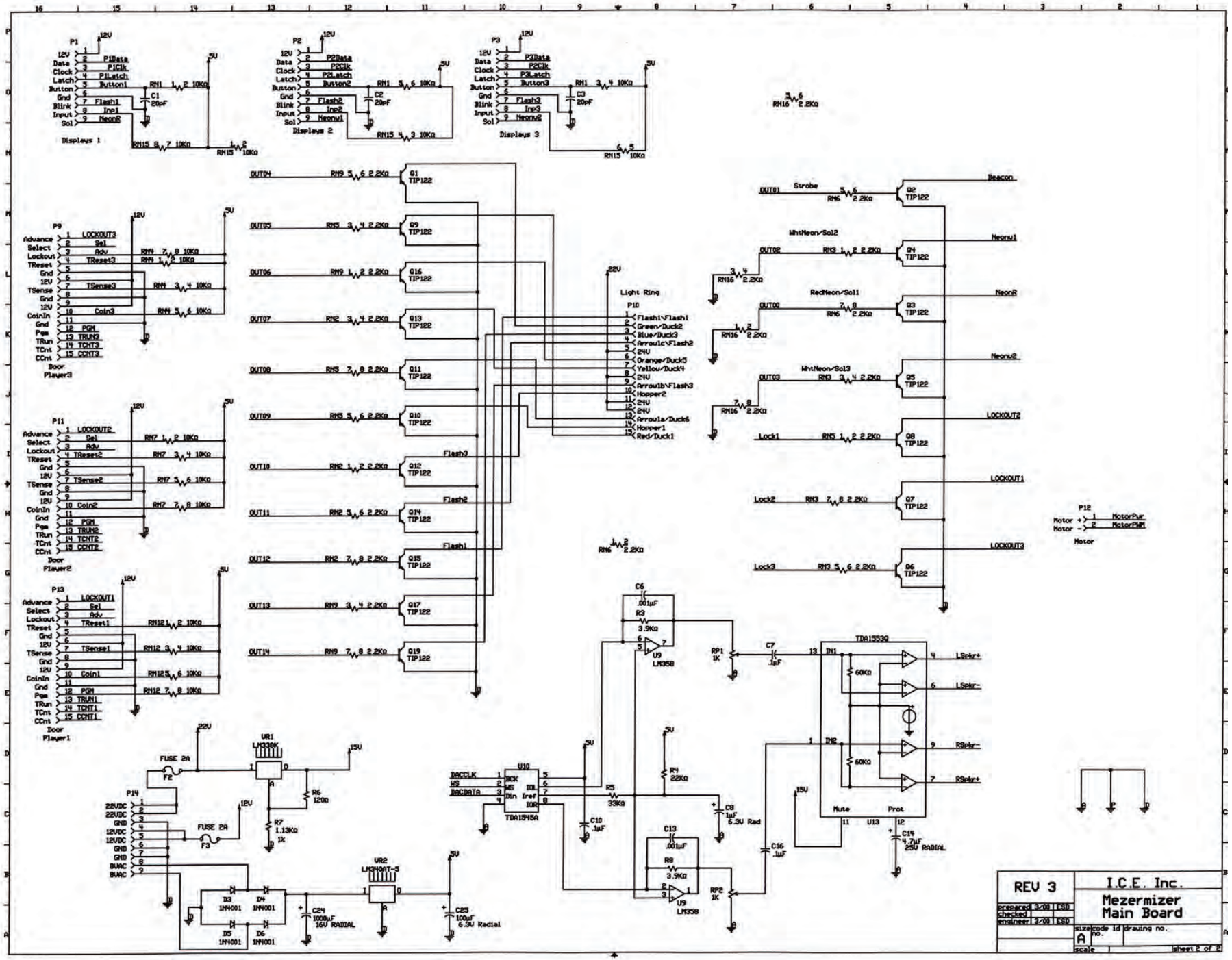
REV 3
I.C.E. Inc.
Mezermizer
Main Board
prepared 3/00 ESD
checked
engineer 3/00 ESD
size A
code id no.
drawing no.
scale
sheet 2 of 2
Displays 1
Displays 2
Displays 3
Light Ring
Door Player3
Door Player2
Door Player1
Motor
TDA1553Q
TDA1545A
LM358
LM338K
LM340AT-5
FUSE 2A
Beacon
Neonu1
NeonR
Neonu2
LOCKOUT2
LOCKOUT1
LOCKOUT3
LSpkr+
LSpkr-
RSpkr-
RSpkr+
Mute
Prot
25V RADIAL
16V RADIAL
6.3V Radial
6.3V Rad

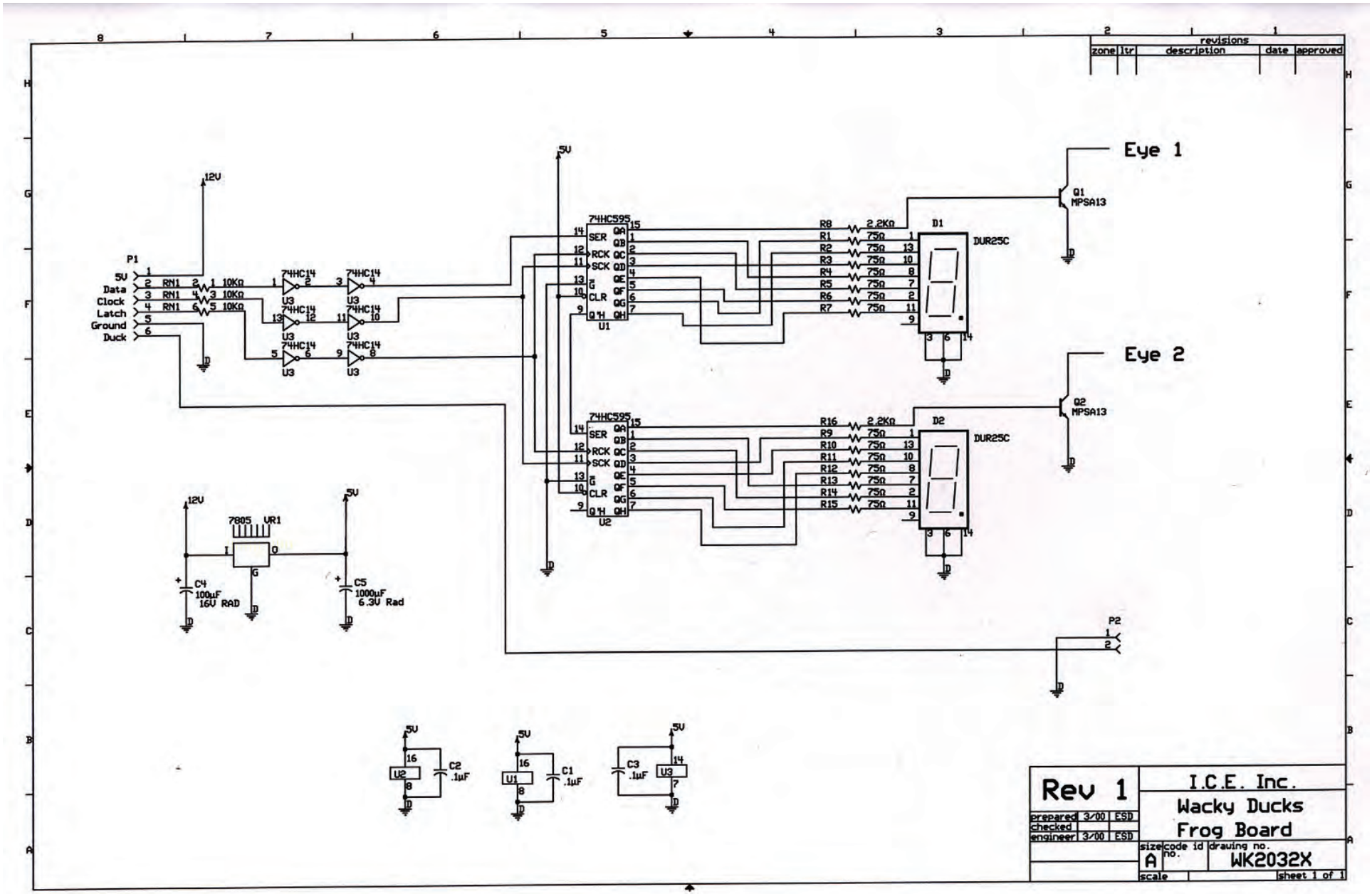
revisions
zone | ltr | description | date | approved
Eye 1
Eye 2
12V
5V
P1
5V
Data
Clock
Latch
Ground
Duck
RN1
10KΩ
74HC14
U3
74HC595
SER
RCK
SCK
G
CLR
QA
QB
QC
QD
QE
QF
QG
QH
U1
U2
R8
R1
R2
R3
R4
R5
R6
R7
R16
R9
R10
R11
R12
R13
R14
R15
2.2KΩ
75Ω
D1
D2
DUR25C
Q1
Q2
MPSA13
7805
VR1
C4
100µF
16V RAD
C5
1000µF
6.3V Rad
C1
C2
C3
.1µF
P2
Rev 1
prepared 3/00 ESD
checked
engineer 3/00 ESD
I.C.E. Inc.
Wacky Ducks
Frog Board
size
A
code id no.
drawing no.
WK2032X
scale
sheet 1 of 1

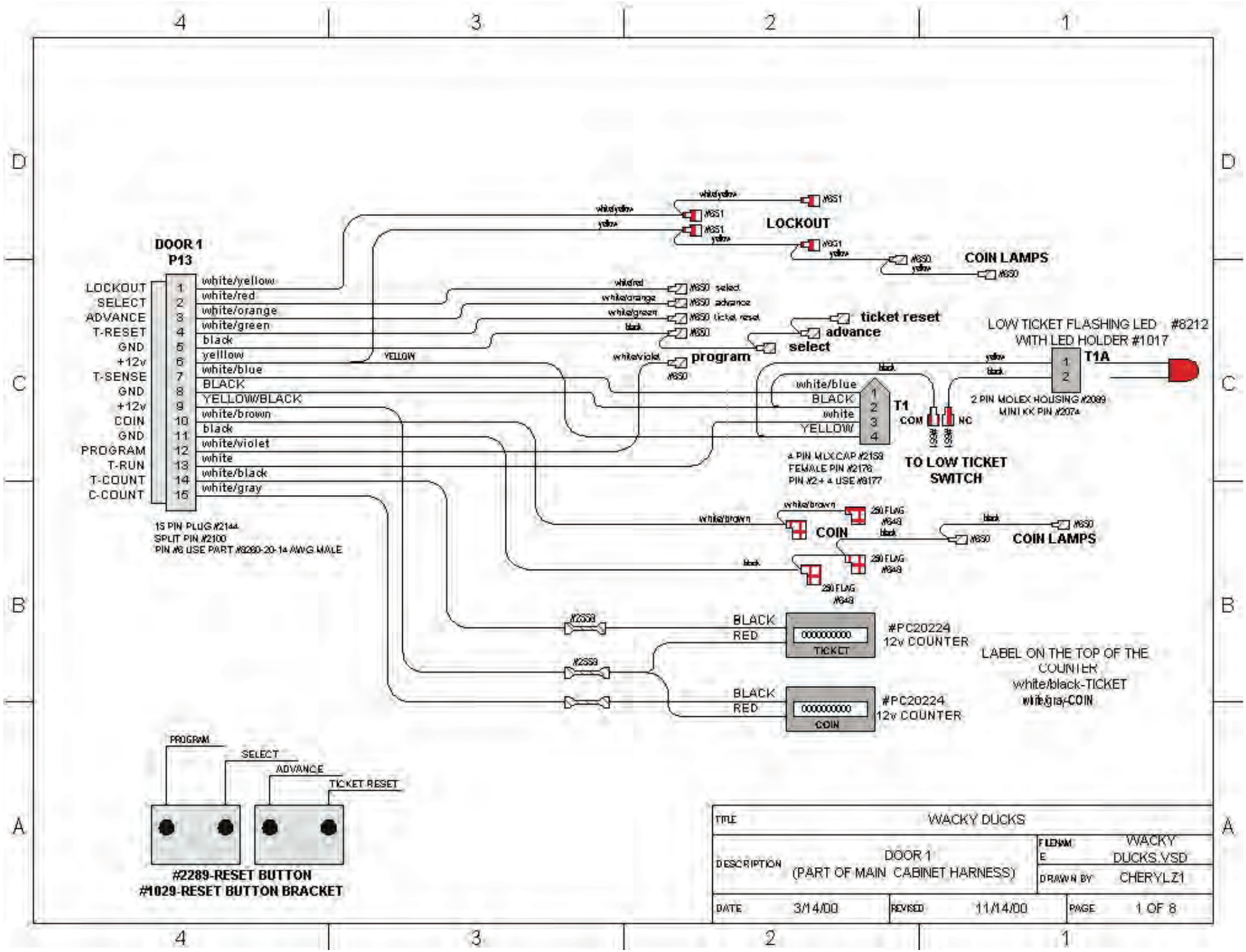
DOOR 1
P13
LOCKOUT
SELECT
ADVANCE
T-RESET
GND
+12v
T-SENSE
GND
+12v
COIN
GND
PROGRAM
T-RUN
T-COUNT
C-COUNT
1 white/yellow
2 white/red
3 white/orange
4 white/green
5 black
6 yelllow
7 white/blue
8 BLACK
9 YELLOW/BLACK
10 white/brown
11 black
12 white/violet
13 white
14 white/black
15 white/gray
15 PIN PLUG #2144
SPLIT PIN #2100
PIN #8 USE PART #8280-20-1a AWG MALE
LOCKOUT
COIN LAMPS
ticket reset
advance
select
program
LOW TICKET FLASHING LED #8212
WITH LED HOLDER #1017
T1A
2 PIN MOLEX HOUSING #2089
MINI KK PIN #207a
T1
COM
NC
4 PIN MLX CAP #2153
FEMALE PIN #2176
PIN #2+ 4 USE #8177
TO LOW TICKET
SWITCH
COIN
COIN LAMPS
250 FLAG #848
BLACK
RED
TICKET
#PC20224
12v COUNTER
COIN
#PC20224
12v COUNTER
LABEL ON THE TOP OF THE
COUNTER
white/black-TICKET
white/gray-COIN
PROGRAM
SELECT
ADVANCE
TICKET RESET
#2289-RESET BUTTON
#1029-RESET BUTTON BRACKET
TITLE WACKY DUCKS
DESCRIPTION DOOR 1
(PART OF MAIN CABINET HARNESS)
FILENAME WACKY DUCKS.VSD
DRAWN BY CHERYLZ1
DATE 3/14/00
REVISED 11/14/00
PAGE 1 OF 8

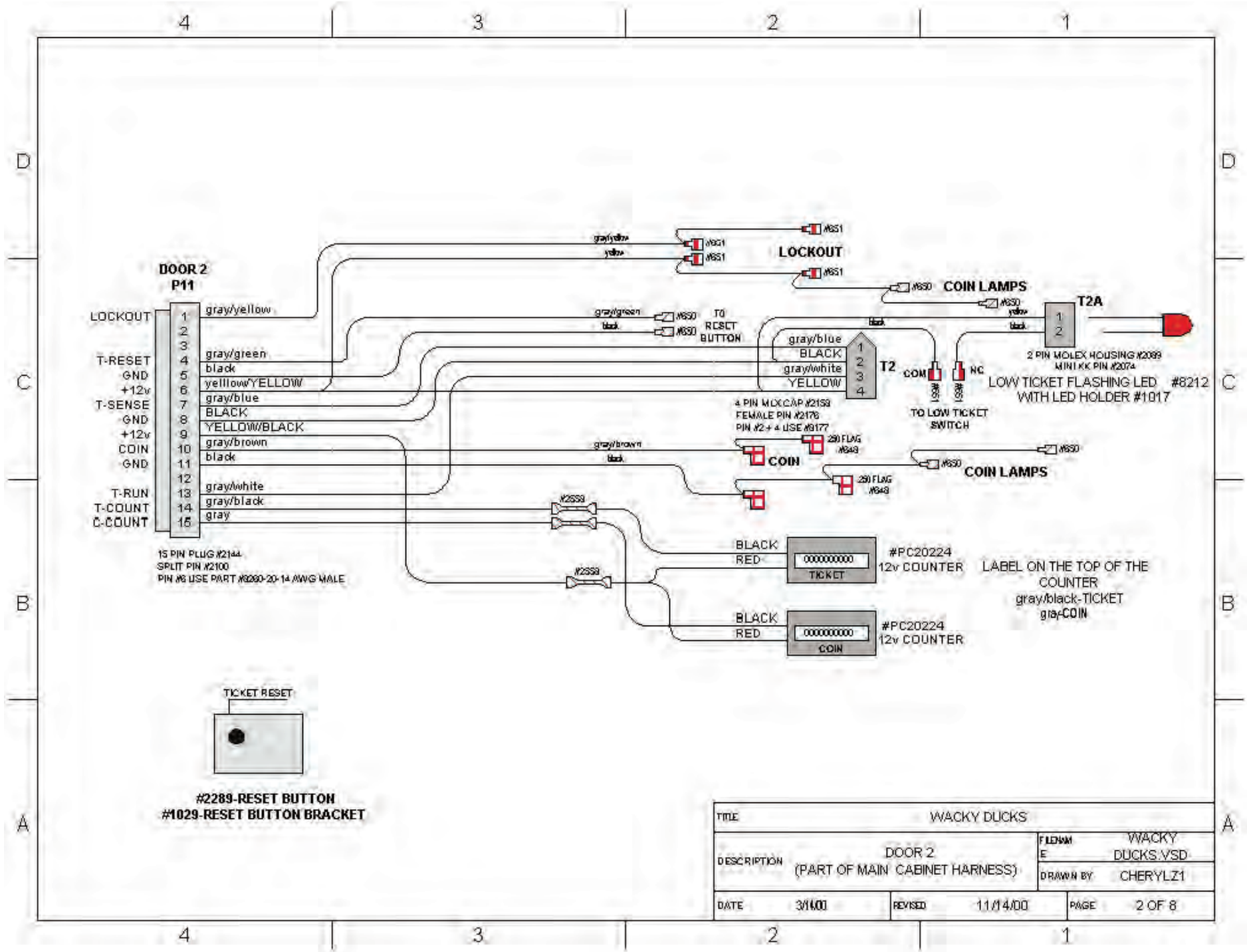
DOOR 2
P11
LOCKOUT
T-RESET
GND
+12v
T-SENSE
GND
+12v
COIN
GND
T-RUN
T-COUNT
C-COUNT
gray/yellow
black
yellow/YELLOW
gray/blue
BLACK
YELLOW/BLACK
gray/brown
black
gray/white
gray/black
gray
15 PIN PLUG #2144
SPLIT PIN #2100
PIN #8 USE PART #8280-20-14 AWG MALE
LOCKOUT
COIN LAMPS
TO RESET BUTTON
T2
T2A
COM
NC
TO LOW TICKET SWITCH
LOW TICKET FLASHING LED #8212
WITH LED HOLDER #1017
2 PIN MOLEX HOUSING #2089
MINI KK PIN #2074
4 PIN MOLEX CAP #2139
FEMALE PIN #2176
PIN #2 + 4 USE #8177
COIN
COIN LAMPS
BLACK
RED
TICKET
COIN
#PC20224
12v COUNTER
LABEL ON THE TOP OF THE COUNTER
gray/black-TICKET
gray-COIN
TICKET RESET
#2289-RESET BUTTON
#1029-RESET BUTTON BRACKET
TITLE
WACKY DUCKS
DESCRIPTION
DOOR 2
(PART OF MAIN CABINET HARNESS)
FILENAME
WACKY DUCKS.VSD
DRAWN BY
CHERYLZ1
DATE
3/14/00
REVISED
11/14/00
PAGE
2 OF 8

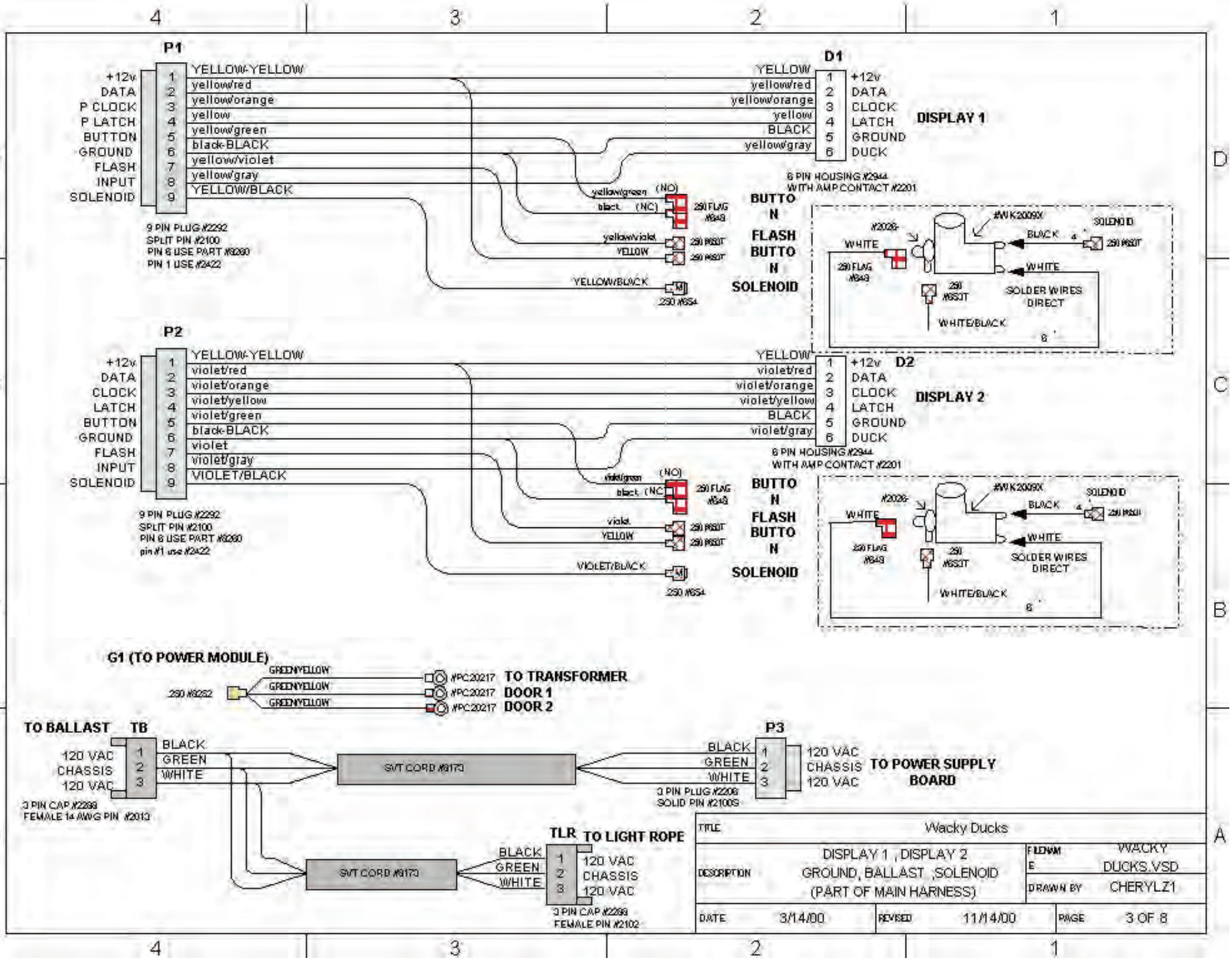
P1
+12v
DATA
P CLOCK
P LATCH
BUTTON
GROUND
FLASH
INPUT
SOLENOID
1 YELLOW-YELLOW
2 yellow/red
3 yellow/orange
4 yellow
5 yellow/green
6 black-BLACK
7 yellow/violet
8 yellow/gray
9 YELLOW/BLACK
9 PIN PLUG #2292
SPLIT PIN #2100
PIN 6 USE PART #6280
PIN 1 USE #2422
D1
YELLOW
yellow/red
yellow/orange
yellow
BLACK
yellow/gray
1 +12v
2 DATA
3 CLOCK
4 LATCH
5 GROUND
6 DUCK
DISPLAY 1
6 PIN HOUSING #2944
WITH AMP CONTACT #2201
yellow/green (NO)
black (NC)
250 FLAG #848
yellow/violet
YELLOW
250 #6837
YELLOW/BLACK
250 #6834
BUTTON
FLASH BUTTON
SOLENOID
#2028-
#WK2009X
WHITE
BLACK
SOLENOID
250 FLAG #848
250 #6837
WHITE
SOLDER WIRES DIRECT
WHITE/BLACK
6
P2
+12v
DATA
CLOCK
LATCH
BUTTON
GROUND
FLASH
INPUT
SOLENOID
1 YELLOW-YELLOW
2 violet/red
3 violet/orange
4 violet/yellow
5 violet/green
6 black-BLACK
7 violet
8 violet/gray
9 VIOLET/BLACK
9 PIN PLUG #2292
SPLIT PIN #2100
PIN 6 USE PART #6280
pin #1 use #2422
D2
YELLOW
violet/red
violet/orange
violet/yellow
BLACK
violet/gray
1 +12v
2 DATA
3 CLOCK
4 LATCH
5 GROUND
6 DUCK
DISPLAY 2
6 PIN HOUSING #2944
WITH AMP CONTACT #2201
violet/green (NO)
black (NC)
250 FLAG #848
violet
YELLOW
250 #6837
VIOLET/BLACK
250 #6834
BUTTON
FLASH BUTTON
SOLENOID
#2028-
#WK2009X
WHITE
BLACK
SOLENOID
250 FLAG #848
250 #6837
WHITE
SOLDER WIRES DIRECT
WHITE/BLACK
6
G1 (TO POWER MODULE)
250 #6252
GREEN/YELLOW
GREEN/YELLOW
GREEN/YELLOW
#PC20217
#PC20217
#PC20217
TO TRANSFORMER
DOOR 1
DOOR 2
TO BALLAST
TB
120 VAC
CHASSIS
120 VAC
1 BLACK
2 GREEN
3 WHITE
3 PIN CAP #2288
FEMALE 14 AWG PIN #2013
S/T CORD #9170
P3
BLACK
GREEN
WHITE
1 120 VAC
2 CHASSIS
3 120 VAC
3 PIN PLUG #2208
SOLID PIN #2100S
TO POWER SUPPLY BOARD
S/T CORD #9170
TLR
TO LIGHT ROPE
BLACK
GREEN
WHITE
1 120 VAC
2 CHASSIS
3 120 VAC
3 PIN CAP #2288
FEMALE PIN #2102
TITLE Wacky Ducks
DESCRIPTION DISPLAY 1 , DISPLAY 2
GROUND, BALLAST ,SOLENOID
(PART OF MAIN HARNESS)
FILENAME WACKY DUCKS.VSD
DRAWN BY CHERYLZ1
DATE 3/14/00
REVISED 11/14/00
PAGE 3 OF 8

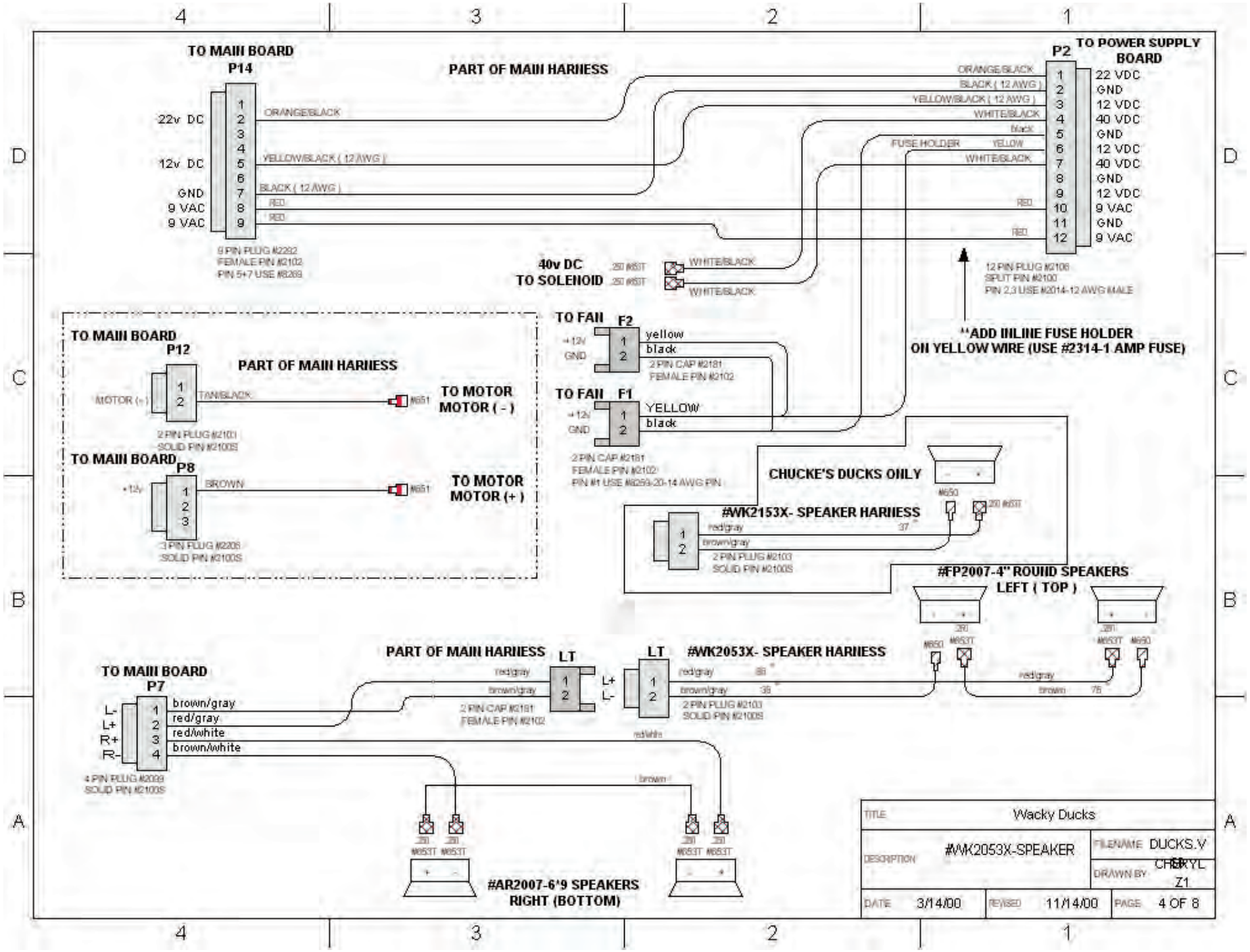
TO MAIN BOARD
P14
PART OF MAIN HARNESS
22v DC
12v DC
GND
9 VAC
9 VAC
ORANGE/BLACK
YELLOW/BLACK (12 AWG)
BLACK (12 AWG)
RED
RED
9 PIN PLUG #2292
FEMALE PIN #2102
PIN 5+7 USE #8269
P2
TO POWER SUPPLY BOARD
ORANGE/BLACK
BLACK (12 AWG)
YELLOW/BLACK (12 AWG)
WHITE/BLACK
Black
FUSE HOLDER
YELLOW
WHITE/BLACK
RED
RED
RED
22 VDC
GND
12 VDC
40 VDC
GND
12 VDC
40 VDC
GND
12 VDC
9 VAC
GND
9 VAC
12 PIN PLUG #2106
SPLIT PIN #2100
PIN 2,3 USE #2014-12 AWG MALE
40v DC
TO SOLENOID
.250 #63T
.250 #63T
WHITE/BLACK
WHITE/BLACK
**ADD INLINE FUSE HOLDER
ON YELLOW WIRE (USE #2314-1 AMP FUSE)
TO MAIN BOARD
P12
PART OF MAIN HARNESS
MOTOR (+)
TAN/BLACK
#651
TO MOTOR
MOTOR (-)
2 PIN PLUG #2101
SOLID PIN #2100S
TO MAIN BOARD
P8
+12v
BROWN
#651
TO MOTOR
MOTOR (+)
3 PIN PLUG #2206
SOLID PIN #2100S
TO FAN
F2
+12v
GND
yellow
black
2 PIN CAP #2181
FEMALE PIN #2102
TO FAN
F1
+12v
GND
YELLOW
black
2 PIN CAP #2181
FEMALE PIN #2102
PIN #1 USE #8259-20-14 AWG PIN
CHUCKE'S DUCKS ONLY
#650
.250 #63T
#WK2153X- SPEAKER HARNESS
red/gray
brown/gray
37"
2 PIN PLUG #2103
SOLID PIN #2100S
#FP2007-4" ROUND SPEAKERS
LEFT (TOP)
.250
.250
#650
#653T
#653T
#650
TO MAIN BOARD
P7
L-
L+
R+
R-
brown/gray
red/gray
red/white
brown/white
4 PIN PLUG #2099
SOLID PIN #2100S
PART OF MAIN HARNESS
LT
red/gray
brown/gray
2 PIN CAP #2181
FEMALE PIN #2102
L+
L-
LT
#WK2053X- SPEAKER HARNESS
red/gray
brown/gray
2 PIN PLUG #2103
SOLID PIN #2100S
red/gray
brown
red/white
brown
.250
.250
#653T
#653T
.250
.250
#653T
#653T
#AR2007-6'9 SPEAKERS
RIGHT (BOTTOM)
TITLE
Wacky Ducks
DESCRIPTION
#WK2053X-SPEAKER
FILENAME
DUCKS.V
DRAWN BY
CHERYL
Z1
DATE
3/14/00
REVISED
11/14/00
PAGE
4 OF 8

#CC3007-WORKBOX
#HH3050-POWER MODULE
WK1006-POWER MODULE BRACKET
#2259-5 AMP FUSE

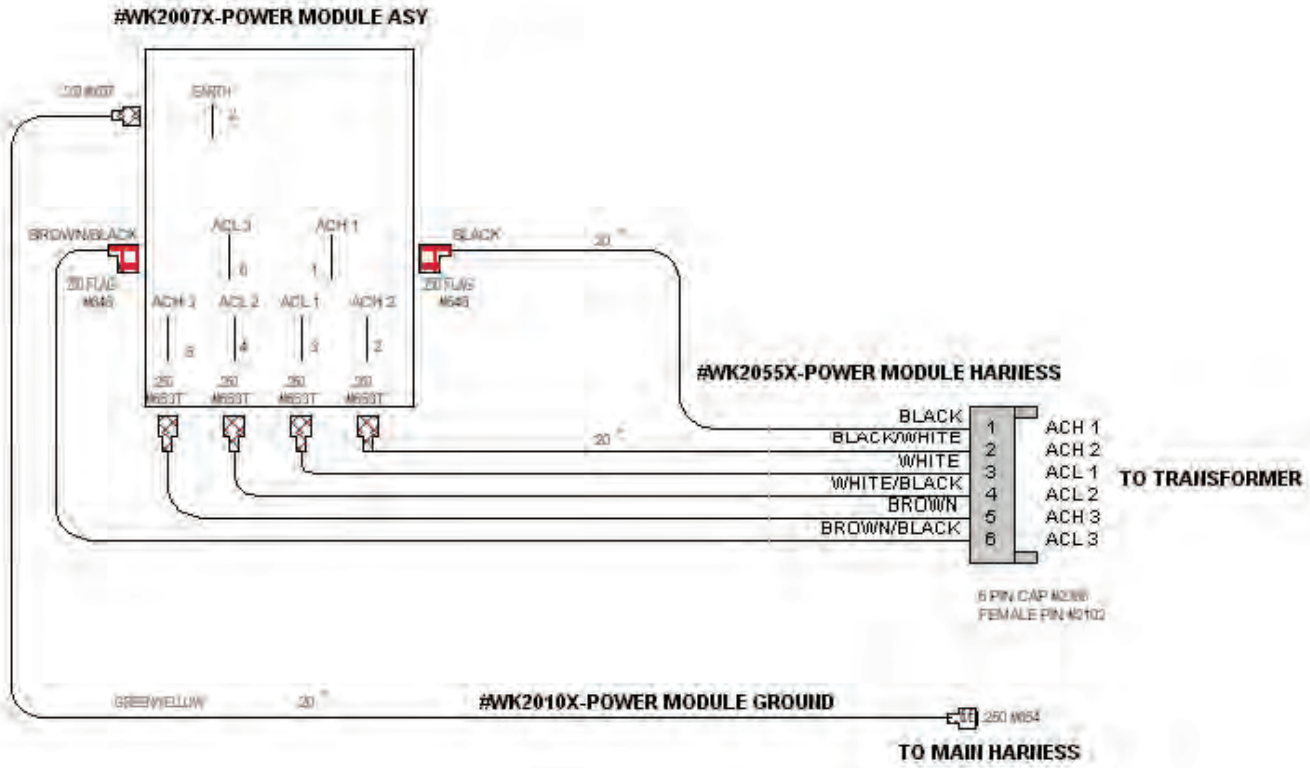

TITLE	Wacky Ducks		
DESCRIPTION	#WK2055X-PWR MOD HARNESS WK2010X-GROUND #WK2007X-PWR MOD ASY	FILENAME	WACKY DUCKS.VSD
		DRAWN BY	CHERYLZ1
DATE	3/14/00	REVISED	11/14/00
		PAGE	5 OF 8

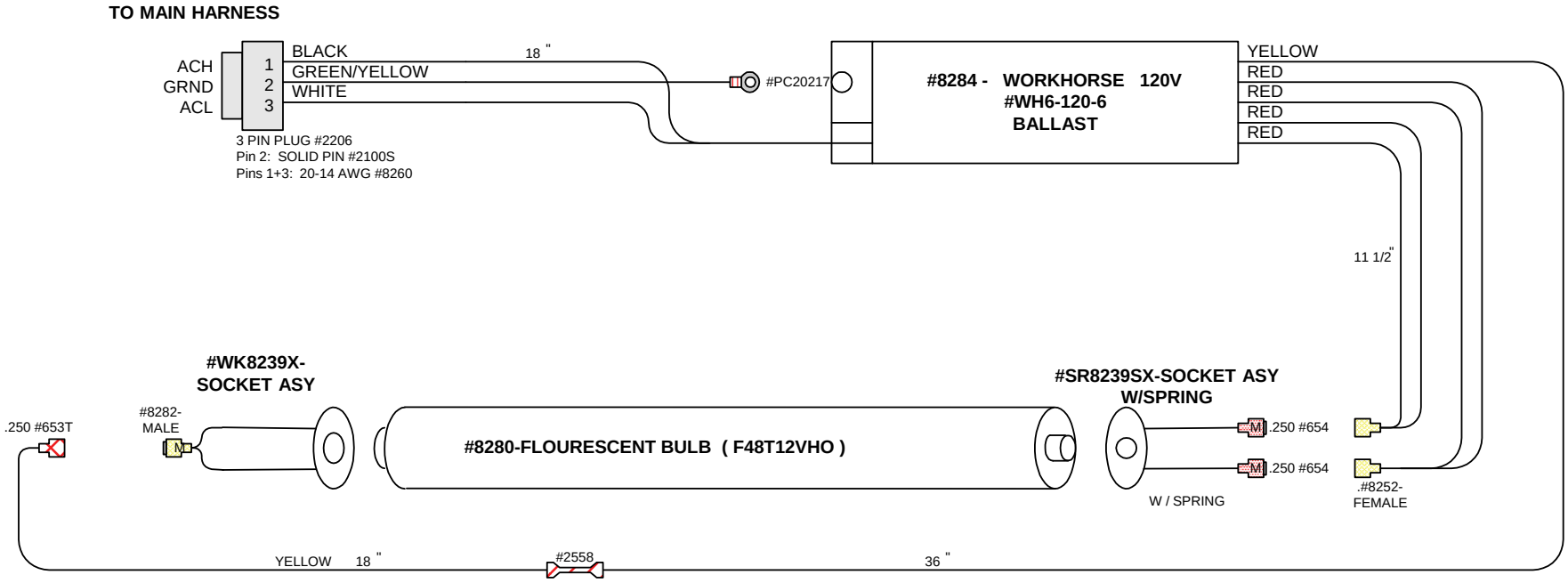

TITLE	Wacky Ducks		
DESCRIPTION	#WK8284X-BALLAST ASY #WK8239X- SOCKET ASY	FILENAME	WACKY DUCKS.VSD
		DRAWN BY	CHERYLZ1
DATE	3/14/00	REVISED	6/14/01
		PAGE	6 OF 8

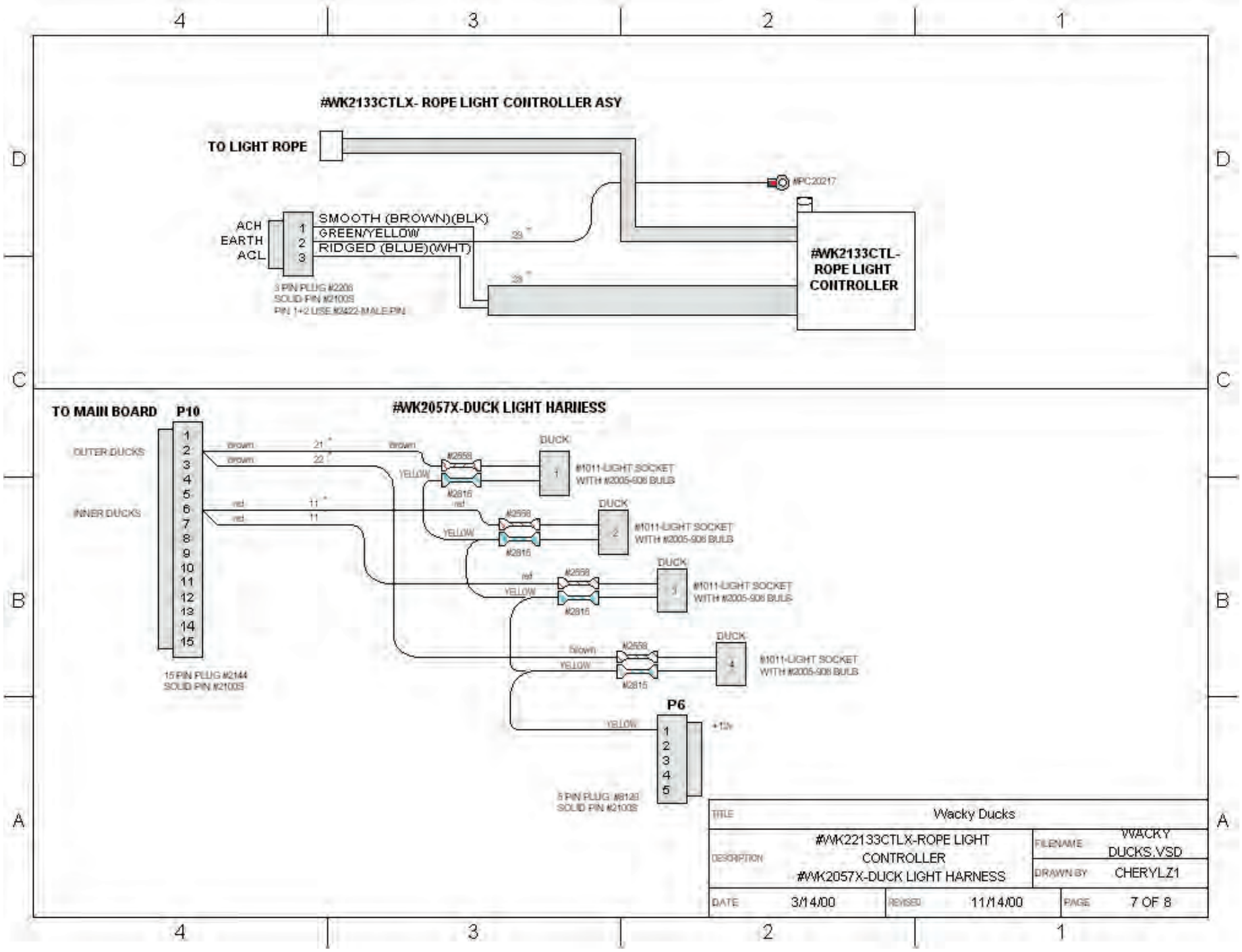
#WK2133CTLX- ROPE LIGHT CONTROLLER ASY
TO LIGHT ROPE
#PC20217
ACH
EARTH
ACL
1
2
3
SMOOTH (BROWN)(BLK)
GREEN/YELLOW
RIDGED (BLUE)(WHT)
29"
29"
3 PIN PLUG #2206
SOLID PIN #2100S
PIN 1+2 USE #2422 MALE PIN
#WK2133CTL-
ROPE LIGHT
CONTROLLER
TO MAIN BOARD
P10
#WK2057X-DUCK LIGHT HARNESS
OUTER DUCKS
INNER DUCKS
brown
brown
red
red
21"
22"
11"
11"
#2558
#2815
YELLOW
DUCK
#1011-LIGHT SOCKET
WITH #2005-906 BULB
15 PIN PLUG #2144
SOLID PIN #2100S
P6
+12v
5 PIN PLUG #8120
SOLID PIN #2100S
TITLE
Wacky Ducks
DESCRIPTION
#WK22133CTLX-ROPE LIGHT
CONTROLLER
#WK2057X-DUCK LIGHT HARNESS
FILENAME
WACKY
DUCKS.VSD
DRAWN BY
CHERYLZ1
DATE
3/14/00
REVISED
11/14/00
PAGE
7 OF 8

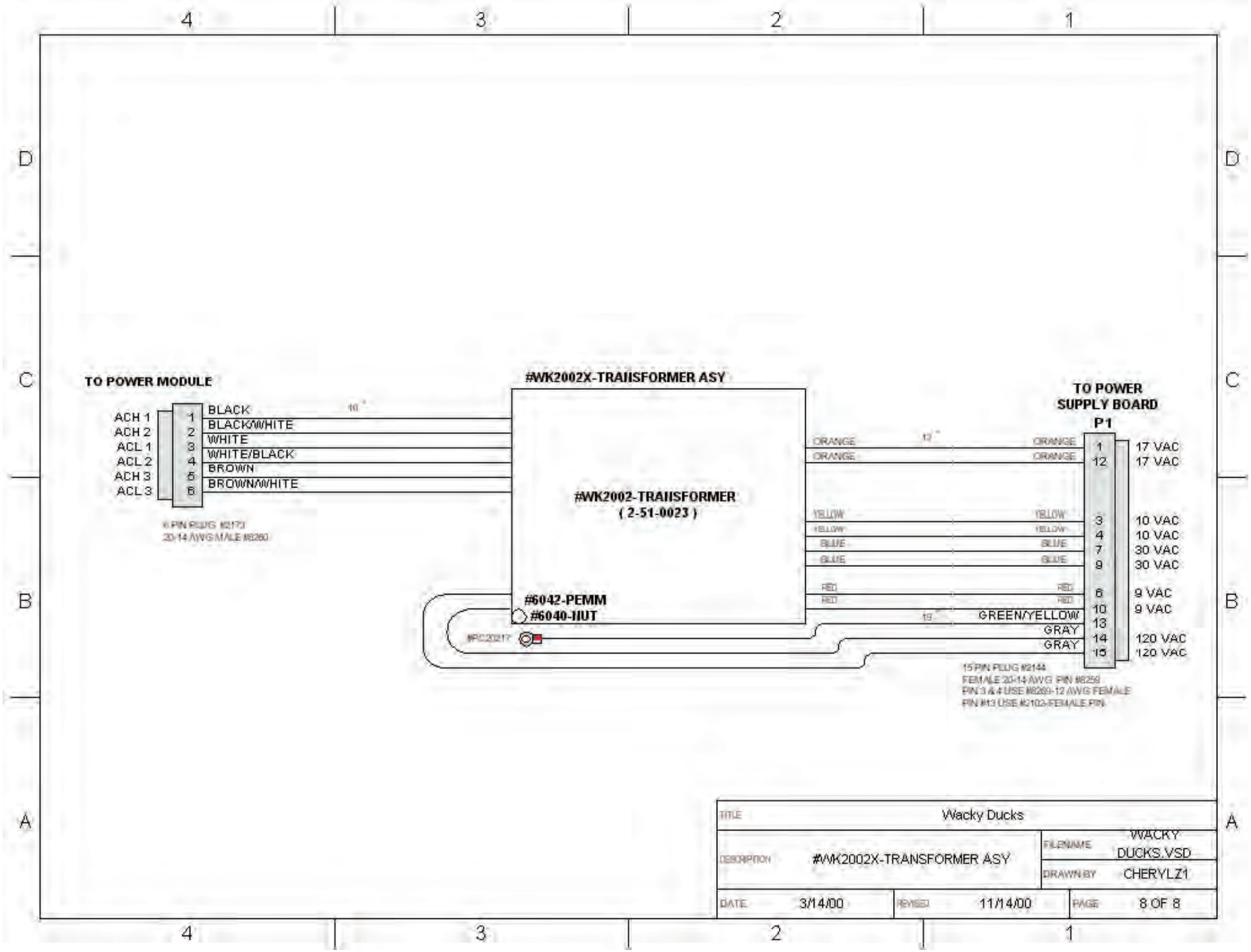
TO POWER MODULE
ACH 1
ACH 2
ACL 1
ACL 2
ACH 3
ACL 3
1 BLACK
2 BLACK/WHITE
3 WHITE
4 WHITE/BLACK
5 BROWN
6 BROWN/WHITE
10"
6 PIN PLUG #2172
20-14 AWG MALE #8260
#WK2002X-TRANSFORMER ASY
#WK2002-TRANSFORMER
(2-51-0023)
#6042-PEMM
#6040-HUT
#PC2017
12"
ORANGE
ORANGE
YELLOW
YELLOW
BLUE
BLUE
RED
RED
19"
GREEN/YELLOW
GRAY
GRAY
TO POWER
SUPPLY BOARD
P1
1 17 VAC
12 17 VAC
3 10 VAC
4 10 VAC
7 30 VAC
9 30 VAC
6 9 VAC
10 9 VAC
13
14 120 VAC
15 120 VAC
15 PIN PLUG #2144
FEMALE 20-14 AWG PIN #8259
PIN 3 & 4 USE #8269-12 AWG FEMALE
PIN #13 USE #2102-FEMALE PIN
TITLE
Wacky Ducks
DESCRIPTION
#WK2002X-TRANSFORMER ASY
FILENAME
WACKY DUCKS.VSD
DRAWN BY
CHERYLZ1
DATE
3/14/00
REVISED
11/14/00
PAGE
8 OF 8

Contacts at SEGA

Machine Sales

Telephone: +44 (0) 208 391 8090
Fax: +44 (0) 208 391 8099
www.sega-amusements.co.uk

SEGA Spares

Telephone: +44 (0) 208 391 8060
Fax: +44 (0) 208 391 8096
www.segatotalsolutions.com

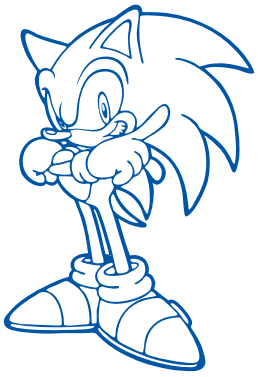

Customer Services

Telephone: +44 (0) 208 391 8065
Fax: +44 (0) 208 391 8096